Shimaden, Temperature and Humidity Control Specialists

°C

%RH

SHIMADEN

CP3700 SERIES SIGNAL CONVERTERS

CP3701 ..... Thermocouple Temperature Converter

CP3702 ..... R.T.D. Temperature Converter

CP3703 ..... mV DC-DC Converter

CP3704 ..... V/mA DC-DC-Converter

CP3705 ..... Alarm Setter (Dual Points)

CP3707 ..... Distributor (with Isolation)

CP3708 ..... Frequency/DC Converter

CP3710 ..... Potentiometer Converter

CP3713 ..... Square-Root Extractor

CP3714 ..... Limiter

CP3716 ..... Change-rate Limiting Converter

CP3720 ..... CT Transmitter (Rms Calculation)

CP3721 ..... PT Transmitter (Rms Calculation)

CP3725 ..... High / Low Selector

CP3729 ..... DC-frequency (pulse) Converter

CP3737 ..... Distributor (Non-Isolation between Input and Output)

CP3738 ..... Manual Setter

CP3739 ..... Ratio & Bias Setter

CP3740 ..... Signal Reverser

CP3759 ..... Relay Unit

CP3761 ..... Adder

CP3762 ..... Subtractor

CP3764 ..... Signal Isolator

CP3765 ..... Multiplier (Arithmetic Operation Unit)

CP3766 ..... Analog hold Converter

CP3770 ..... Doubler-Inverter

BASIC FEATURES

- ❑ ***Slim-shaped plug-in converter with isolated single/dual- output***
- ❑ ***DIN Rail mounting or Lateral mounting***
- ❑ ***Power supply 100 to 240V AC or 24V DC***
- ❑ ***Moisture-proof coating is applied as standard.***
- ❑ ***Gold-plated socket contacts***

COMMON SPECIFICATIONS

● Power supply	: 100 to 240V AC ±10% or 24V DC±10%
● Voltage tolerance	: 100 to 240V AC: 85 to 264V AC 47 to 63Hz 24V DC: 24V DC±10%
● Operating ambient	
Temperature	: -5 to 55 °C
Humidity	: 5 to 90%RH (No dew condensation)
● Stock temperature	: -10 to 60 °C
● Installation	: Wall / DIN rail mounting Wiring / M3.5 screw terminal connection (with a power terminal block cover & drop-proof screws) Screwing Torque / 0.8 to 1.0 [Nm] * Recommended
● Materials	: Housing: ABS resin (UL94V-0) : Terminal block: PBT resin (UL94V-0) Terminal block cover: PC resin (UL94V-2) Din-rail stopper: PP resin (UL94-HB)
● External dimensions	: H86×W29×D125 mm (including the mounting screw and socket terminal board) (Refer to the last page for external dimensions and mounting dimensions.)
● Weight	: Main body: 120g max. Terminal block: 80g max

TERMINAL ARRANGEMENT DIAGRAM/SIGNAL ASSIGNMENT

■ TERMINAL ARRANGEMENT

■ SIGNAL ASSIGNMENT

Common to CP3700 series

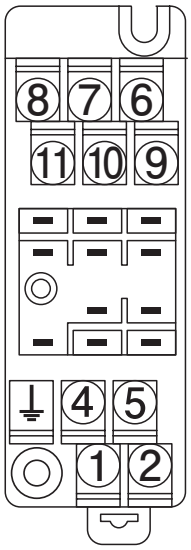

SOCKET TOP VIEW

CP3701

1	P (+)	POWER
2	N (−)	
⏚	GND	
4	+	OUTPUT 1
5	−	OUTPUT 1
6	N. C.	
7	+	OUTPUT 2
8	−	OUTPUT 2
9	T. C.+	
10	T. C. −	
11	N. C.	

CP3702

1	P (+)	POWER
2	N (−)	
⏚	GND	
4	+	OUTPUT 1
5	−	OUTPUT 1
6	N. C.	
7	+	OUTPUT 2
8	−	OUTPUT 2
9	A RTD	
10	B RTD	
11	B' RTD	

CP3703/3704/3713/3714/3716/3729/3737/3739/3740/3770

1	P (+)	POWER
2	N (−)	
⏚	GND	
4	+	OUTPUT 1
5	−	OUTPUT 1
6	N. C.	
7	+	OUTPUT 2
8	−	OUTPUT 2
9	+	INPUT
10	−	INPUT
11	N. C.	

For Output 1, the pins of terminal nos. 7 & 8 are N.C.

CP3705

1	P (+)	POWER
2	N (−)	
⏚	GND	
4	NC	OUT 1
5	NO	OUT 1
6	COM	OUT 1
7	COM	OUT 2
8	NO	OUT 2
9	+	INPUT
10	−	INPUT
11	NC	OUT 2

CP3707

1	P (+)	POWER
2	N (−)	
⏚	GND	
4	+	OUTPUT 1
5	−	OUTPUT 1
6	N. C.	
7	+	OUTPUT 2
8	−	OUTPUT 2
9	+	INPUT
10	−	INPUT
11	COM	

CP3708

1	P (+)	POWER
2	N (−)	
⏚	GND	
4	+	OUTPUT 1
5	−	OUTPUT 1
6	N. C.	
7	+	OUTPUT 2
8	−	OUTPUT 2
9	+	INPUT
10	−	INPUT
11	EX	

For Output 1, the pins of terminal nos. 7 & 8 are N.C.

CP3710

1	P (+)	POWER
2	N (−)	
⏚	GND	
4	+	OUTPUT 1
5	−	OUTPUT 1
6	N. C.	
7	+	OUTPUT 2
8	−	OUTPUT 2
9	A POT	
10	B POT	
11	C POT	

CP3720

1	P (+)	POWER
2	N (−)	
⏚	GND	
4	+	OUTPUT 1
5	−	OUTPUT 1
6	(L)	INPUT
7	+	OUTPUT 2
8	−	OUTPUT 2
9	L	INPUT
10	N	INPUT
11	(N)	INPUT

CP3721

1	P (+)	POWER
2	N (−)	
⏚	GND	
4	+	OUTPUT 1
5	−	OUTPUT 1
6	N. C.	
7	+	OUTPUT 2
8	−	OUTPUT 2
9	N. C.	
10	L	INPUT
11	N	INPUT

CP3725/3761/3762/3765

1	P (+)	POWER
2	N (−)	
⏚	GND	
4	+	OUTPUT 1
5	−	OUTPUT 1
6	−	INPUT 2
7	+	OUTPUT 2
8	−	OUTPUT 2
9	+	INPUT 1
10	−	INPUT 1
11	+	INPUT 2

For Output 1, the pins of terminal nos. 7 & 8 are N.C.

CP3738

1	P(+)	POWER
2	N(−)	
⏚	GND	
4	+	OUTPUT 1
5	−	OUTPUT 1
6	N. C	
7	+	OUTPUT 2
8	−	OUTPUT 2
9	N. C	
10	N. C	
11	N. C	

CP3759

1	P(+)	POWER
2	N(−)	
⏚	GND	
4	NC OUT 1	
5	NO OUT 1	
6	COM OUT 1	
7	COM OUT 2	
8	NO OUT 2	
9	+ INPUT	
10	− INPUT	
11	NC OUT 2	

CP3764

1	N. C.	
2	N. C.	
⏚	N. C.	
4	+	OUTPUT Ch 1
5	−	OUTPUT Ch 1
6	−	INPUT Ch 2
7	+	OUTPUT Ch 2
8	−	OUTPUT Ch 2
9	+	INPUT Ch 1
10	−	INPUT Ch 1
11	+	INPUT Ch 2

CP3766

1	P (+)	POWER
2	N (−)	
⏚	GND	
4	+	OUTPUT 1
5	−	OUTPUT 1
6	N. C.	
7	+	HOLD
8	−	HOLD
9	+	INPUT
10	−	INPUT
11	N. C.	

Thermocouple Temperature Converter

CE approved

OVERVIEW

Block Diagram & Terminal Wiring

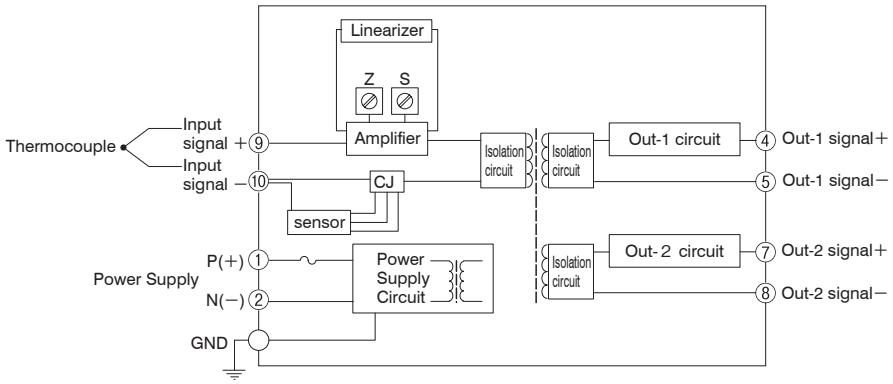

DESCRIPTION

The CP3701 is a slim, plug-in Thermocouple Temperature Converter that converts input signals from a thermocouple into commonly used DC signals and provides isolated single or dual output. .

SPECIFICATIONS

■ INPUT SECTION

- Input : Thermocouple / K, E, J, T, B, R, S, N (See measuring "ORDERING INFORMATION")
- Ranges Available : See measuring "MEASURING RANGE CODES"
- Input Resistance : With or without power: 1MΩ min.
- Reference junction temperature compensation : Built-in temperature compensator (temperature sensing element)
- Allowable Signal Source Resistance : 1kΩ max.
- Input Voltage : 30V DC max., continuous.

■ OUTPUT SECTION

- Allowable Output Load : Voltage Output (DC) / 1V span min. Load current: 2mA max.
  10mV span min. Load resistance: 10kΩmin.
  100mV span min. Load resistance: 100kΩmin.
  : Current Output (DC) / 4 to 20mA single output Load current: 750Ωmax.
  4 to 20mA dual output Output 1: 550Ω max./Output 2: 350Ω max
- Conversion output variable range : Zero Adjustment Approx. ±5% of span. (Adjustable by the front-accessible trimmer.)
  : Span Adjustment Approx. ±5% of span. (Adjustable by the front-accessible trimmer.)
- Burnout : up-scale

■ STANDARDS CONFORMITY

- Conversion accuracy : Within ±0.1%FS ±0.5°C (sensing element accuracy) + linearization accuracy/at 25±5°C
  Linearization accuracy will be changed by input span

Input span		accuracy (%)
JIS K	0 to 300 °C	0.1
JIS J	0 to 200 °C	0.15
JIS E	0 to 600 °C	0.25
JIS S	0 to 1000 °C	0.25
JIS K	0 to 600 °C	0.15
JIS E	0 to 200 °C	0.15
JIS R	0 to 1600 °C	0.5
JIS T	0 to 300 °C	0.25

- Effection against ambient temperature: : ±0.2% max. against span of 10°C temperature difference
- Response speed: : 160m sec. max. (0 to 90%) at 100% step input
- Isolation : Between Input-Output 1-Output 2-Power-Ground
- Insulation Resistance : Between input - [1st output, 2nd output] - [power supply, ground]: 2000V AC
  Between power supply and ground: 2000V AC
  Between output 1 and output 2: 500V AC

● Dielectric Strength : Input / [Output 1, Output 2] / [Power, Ground]: 2000V AC
Power / Ground: 2000V AC
Output 1 / Output 2: 500V AC

● Applicable standards : Safety IEC61010-1 and EN61010-1
EMC EN61326-1
RoHS directive supported

■ **POWER SECTION**

● Maximum power consumption

Power	2 Voltage Outputs	2 Current Outputs	Dual Output
AC100V	3VA max.	5VA max.	5VA max.
AC240V	4.5VA max.	7VA max.	7VA max.
DC24V	1.2W max.	1.8W max.	1.8W max.

MEASURING RANGE CODES

Input Type	Measuring Range	Code
E / J K / T	-100 to 100 °C	016
	-50 to 150 °C	035
	0 to 100 °C	219
	0 to 150 °C	223
	0 to 200 °C	226
	0 to 300 °C	230
	0 to 400 °C	240
	-200 to 200 °C	504
	-150 to 150 °C	507
	-50 to 200 °C	533
E / J / K	0 to 500 °C	250
	0 to 600 °C	260
K	0 to 800 °C	308
	0 to 1000 °C	310
K / N / R	0 to 1200 °C	312
N / R	0 to 1300 °C	313
S / R	0 to 1400 °C	314
	0 to 1600 °C	316
B	0 to 1800 °C	318 *
Other		999

* Accuracy gurrantee not applicable to 600 °C or below.

ORDERING INFORMATION

ITEMS	CODE	SPECIFICATIONS
SERIES	CP3701-	Thermocouple Temperature Converter
OUTPUT 1	1	0 to 10mV DC
	2	0 to 100mV DC
	3	-10 to 10mV DC
	4	-100 to 100mV DC
	5	1 to 5V DC
	6	4 to 20mA DC
	7	0 to 5V DC
	8	0 to 10V DC
	9	Others (Please consult before ordering.)
OUTPUT 2	0	None
	1	0 to 10mV DC
	2	0 to 100mV DC
	3	-10 to 10mV DC
	4	-100 to 100mV DC
	5	1 to 5V DC
	6	4 to 20mA DC * Note: Available only when output 1 (4 to 20mA DC) is selected.
	7	0 to 5V DC
	8	0 to 10V DC
	9	Others (Please consult before ordering.)
POWER SUPPLY	90-	100 to 240V AC ±10%, 50/60Hz
	08-	24V DC ±10%
INPUT	K	Thermocouple (K)
	E	Thermocouple (E)
	J	Thermocouple (J)
	T	Thermocouple (T)
	B	Thermocouple (B)
	R	Thermocouple (R)
	S	Thermocouple (S)
	N	Thermocouple (N)
	X	Others (Please consult before ordering.)
MEASURING RANGE	□□□	See measuring range codes.
REMARKS	0	Without
	9	With (Please consult before ordering.)

RTD Temperature Converter

OVERVIEW

CE approved

Block Diagram & Terminal Wiring

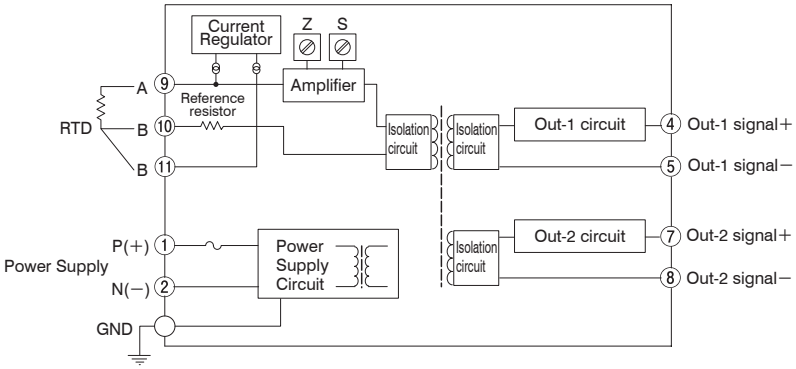

DESCRIPTION

The CP3702 is a slim, plug-in R.T.D. Temperature Converter that converts input signals from an RTD into commonly used DC signals and provides isolated single or dual output.

SPECIFICATIONS

■ INPUT SECTION

- Input : R.T.D. Pt100/JPt100 (See measuring "ORDERING INFORMATION")
- Ranges Available : See measuring "MEASURING RANGE CODES"
- Amperage : about 1mA
- Input lead wire resistance : 200Ωmax./wire

■ OUTPUT SECTION

- Allowable Output Load : Voltage Output (DC) / 1V span min. Load current: 2mA max.
  10mV span min. Load resistance: 10kΩmin.
  100mV span min. Load resistance: 100kΩmin.
  : Current Output (DC) / 4 to 20mA single output Load current: 750Ωmax.
  4 to 20mA dual output Output 1: 550Ω max./Output 2: 350Ω max
- Conversion output variable range : Zero Adjustment Approx. ±5% of span. (Adjustable by the front-accessible trimmer.)
  : Span Adjustment Approx. ±5% of span. (Adjustable by the front-accessible trimmer.)
- Burnout: : up-scale (Even if A, B, or B' is disconnected)

■ STANDARDS CONFORMITY

- Accuracy Rating : Within ±0.15% of span (at 25°C±5°C).
- Effect of ambient temperature : Within ±0.2% span for 10°C change.
- Response Time : 170ms max. (0 to 90%) with a step input at 100%.
- Isolation : 100MΩ min. (@ 500V DC) between input, output 1, output 2, power, and ground
- Insulation Resistance : Between input - [1st output, 2nd output] - [power supply, ground]: 2000V AC
  Between power supply and ground: 2000V AC
  Between output 1 and output 2: 500V AC
- Dielectric Strength : Input / [Output 1, Output 2] / [Power, Ground]: 2000V AC
  Power / Ground: 2000V AC
  Output 1 / Output 2: 500V AC
- Applicable standards : Safety IEC61010-1 and EN61010-1
  EMC EN61326-1
  RoHS directive supported

■ POWER SECTION

- Maximum power consumption :

Power	2 Voltage Outputs	2 Current Outputs	Dual Output
AC100V	3VA max.	5VA max.	5VA max.
AC240V	4.5VA max.	7VA max.	7VA max.
DC24V	1.2W max.	1.8W max.	1.8W max.

ORDERING INFORMATION

ITEMS	CODE	SPECIFICATIONS
SERIES	CP3702-	R.T.D. Temperature Converter
OUTPUT 1	1	0 to 10mV DC
	2	0 to 100mV DC
	3	-10 to 10mV DC
	4	-100 to 100mV DC
	5	1 to 5V DC
	6	4 to 20mA DC
	7	0 to 5V DC
	8	0 to 10V DC
	9	Others (Please consult before ordering.)
OUTPUT 2	0	None
	1	0 to 10mV DC
	2	0 to 100mV DC
	3	-10 to 10mV DC
	4	-100 to 100mV DC
	5	1 to 5V DC
	6	4 to 20mA DC * Note: Available only when output 1 (4 to 20mA DC) is selected.
	7	0 to 5V DC
	8	0 to 10V DC
	9	Others (Please consult before ordering.)
POWER SUPPLY	90-	100 to 240V AC ±10% 50/60Hz
	08-	24V DC ±10%
INPUT	F	Pt100
	J	JPt100
MEASURING RANGE	□□□	See measuring range codes.
REMARKS	0	Without
	9	With (Please consult before ordering.)

MEASURING RANGE CODES

Input Type	Measuring Range	Code
PT100 JPt100	-100 to 100 °C	016
	-100 to 50 °C	018
	-100 to 0 °C	020
	-60 to 40 °C	029
	-50 to 150 °C	035
	-50 to 100 °C	036
	-50 to 50 °C	038
	-20 to 80 °C	053
	-10 to 50 °C	063
	0 to 50 °C	211
	0 to 60 °C	213
	0 to 100 °C	219
	0 to 150 °C	223
	0 to 200 °C	226
	0 to 250 °C	228
	0 to 300 °C	230
	0 to 350 °C	235
	0 to 400 °C	240
	Other	999

mV DC-DC Converter

OVERVIEW

CE approved

Block Diagram & Terminal Wiring

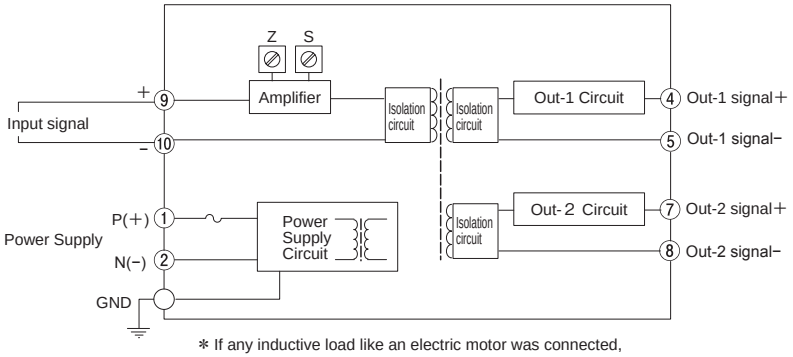

＊If any inductive load like an electric motor was connected, a relay contact protection circuit must be used.

DESCRIPTION

The CP3703 is a slim, plug-in mV DC-DC Converter that converts mV input signals from sensors or other devices into commonly used DC signals and provides isolated single or dual output.

SPECIFICATIONS

■ INPUT SECTION

- Input : DC voltage signal mV (see "ORDERING INFORMATION")
- Input resistance: : 1MΩmin. (1MΩ when power failure/constant input)
- Input tolerable voltage : 30V DC Max. continuous

■ OUTPUT SECTION

- Allowable Output Load : Voltage Output (DC) / 1V span min. Load current: 2mA max.
  10mV span min. Load resistance: 10kΩmin.
  100mV span min. Load resistance: 100kΩmin.
  : Current Output (DC) / 4 to 20mA single output Load current: 750Ωmax.
  4 to 20mA dual output Output 1: 550Ω max./Output 2: 350Ω max
- Conversion output variable range : Zero Adjustment Approx. ±5% of span. (Adjustable by the front-accessible trimmer.)
  : Span Adjustment Approx. ±5% of span. (Adjustable by the front-accessible trimmer.)

■ STANDARDS CONFORMITY

- Accuracy Rating : Within ±0.1% of span (at 25°C±5°C).
- Effect of ambient temperature : Within ±0.2% span for 10°C change.
- Conversion output : DC voltage, current (see "ORDERING INFORMATION")
- Response Time : 160ms max. (0 to 90%) with a step input at 100%.
- Isolation : Between Input-Output 1-Output 2-Power-Ground
- Insulation Resistance : Between input - [1st output, 2nd output] - [power supply, ground]: 2000V AC
  Between power supply and ground: 2000V AC
  Between output 1 and output 2: 500V AC
- Applicable standards : Safety IEC61010-1 and EN61010-1
  EMC EN61326-1
  RoHS directive supported

■ POWER SECTION

- Maximum power consumption :

Power	2 Voltage Outputs	2 Current Outputs	Dual Output
AC100V	2.5VA max.	4VA max.	4VA max.
AC240V	3.5VA max.	5VA max.	5VA max.
DC24V	1.1W max.	1.6W max.	1.6W max.

ORDERING INFORMATION

ITEMS	CODE	SPECIFICATIONS
SERIES	CP3703-	mV DC-DC Converter
INPUT	1	0 to 10mV DC
	2	0 to 100mV DC
	9	Others (Please consult before ordering.)
OUTPUT 1	1	0 to 10mV DC
	2	0 to 100mV DC
	3	-10 to 10mV DC
	4	-100 to 100mV DC
	5	1 to 5V DC
	6	4 to 20mA DC
	7	0 to 5V DC
	8	0 to 10V DC
	9	Others (Please consult before ordering.)
OUTPUT 2	0	None
	1	0 to 10mV DC
	2	0 to 100mV DC
	3	-10 to 10mV DC
	4	-100 to 100mV DC
	5	1 to 5V DC
	6	4 to 20mA DC * Note: Available only when output 1 (4 to 20mA DC) is selected.
	7	0 to 5V DC
	8	0 to 10V DC
	9	Others (Please consult before ordering.)
POWER SUPPLY	90-	100 to 240V AC ±10% 50/60Hz
	08-	24V DC ±10%
REMARKS	0	Without
	9	With (Please consult before ordering.)

V/mA DC-DC Converter

OVERVIEW

CE approved

Block Diagram & Terminal Wiring

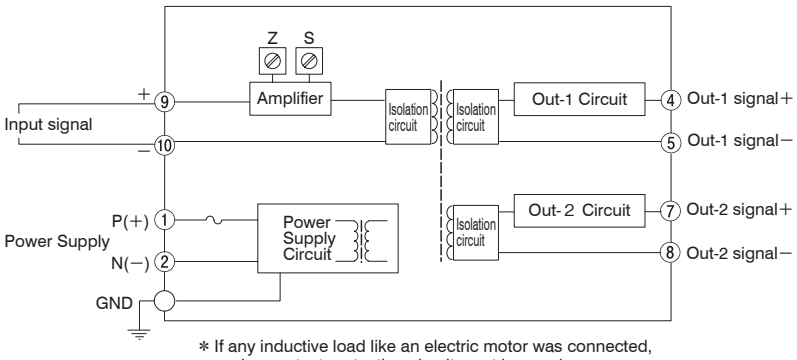

＊If any inductive load like an electric motor was connected, a relay contact protection circuit must be used.

DESCRIPTION

This Slim-shaped Plug-in V/mA DC-DC Converter, CP3704 functions to convert DC signal or VDC signal into any designated DC signals to generate isolated single or dual output.

SPECIFICATIONS

■ INPUT SECTION

- Input : DC current or mA signal (see "ORDERING INFORMATION")
- Input resistance: : Voltage input: 1MΩmin. (1MΩ when power failure/constant input)
  Current input: 250Ω
- Input tolerable range : Voltage input: 30V DC
  Current input: 40mA DC

■ OUTPUT SECTION

- Allowable Output Load : Voltage Output (DC) / 1V span min. Load current: 2mA max.
  10mV span min. Load resistance: 10kΩmin.
  100mV span min. Load resistance: 100kΩmin.
  : Current Output (DC) / 4 to 20mA single output Load current: 750Ωmax.
  4 to 20mA dual output Output 1: 550Ω max./Output 2: 350Ω max
- Conversion output variable range : Zero Adjustment Approx. ±5% of span. (Adjustable by the front-accessible trimmer.)
  : Span Adjustment Approx. ±5% of span. (Adjustable by the front-accessible trimmer.)

■ STANDARDS CONFORMITY

- Conversion accuracy : Within ±0.1% at 25±5 °C
- Conversion output : DC voltage, current (see "ORDERING INFORMATION")
- Effect of ambient temperature : Within ±0.2% span for 10°C change.
- Response Time : 85ms max. (0 to 90%) with a step input at 100%.
- Isolation : Between Input-Output 1-Output 2-Power-Ground
- Insulation Resistance : 100MΩ min. (@ 500V DC) between input, output 1, output 2, power, and ground.
- Dielectric Strength : Input / [Output 1, Output 2] / [Power, Ground]: 2000V AC for 1 minute
  Power / Ground: 2000V AC for 1 minute
  Output 1 / Output 2: 500V AC for 1 minute
- Applicable standards : Safety IEC61010-1 and EN61010-1
  EMC EN61326-1
  RoHS directive supported

■ POWER SECTION

- Maximum power consumption :

Power	2 Voltage Outputs	2 Current Outputs	Dual Output
AC100V	2.5VA max.	4VA max.	4VA max.
AC240V	3.5VA max.	5VA max.	5VA max.
DC24V	1.0W max.	1.5W max.	1.6W max.

ORDERING INFORMATION

ITEMS	CODE	SPECIFICATIONS
SERIES	CP3704-	V/mA DC-DC Converter
INPUT	1	0 to 5V DC
	3	0 to 1V DC
	4	0 to 10V DC
	5	1 to 5V DC
	6	4 to 20mA DC
	7	-5 to 5V DC
	8	-10 to 10V DC
	9	Others (Please consult before ordering.)
OUTPUT 1	1	0 to 10mV DC
	2	0 to 100mV DC
	3	-10 to 10mV DC
	4	-100 to 100mV DC
	5	1 to 5V DC
	6	4 to 20mA DC
	7	0 to 5V DC
	8	0 to 10V DC
	9	Others (Please consult before ordering.)
OUTPUT 2	0	None
	1	0 to 10mV DC
	2	0 to 100mV DC
	3	-10 to 10mV DC
	4	-100 to 100mV DC
	5	1 to 5V DC
	6	4 to 20mA DC * Note: Available only when output 1 (4 to 20mA DC) is selected.
	7	0 to 5V DC
	8	0 to 10V DC
	9	Others (Please consult before ordering.)
POWER SUPPLY	90-	100 to 240V AC ±10% 50/60Hz
	08-	24V DC ±10%
REMARKS	0	Without
	9	With (Please consult before ordering.)

Alarm Setter (Dual Points)

OVERVIEW

CE approved

Block Diagram & Terminal Wiring

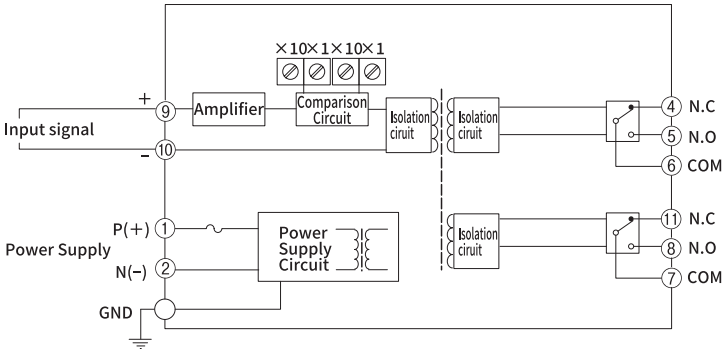

∗ If any inductive load like an electric motor was connected, a relay contact protection circuit must be used.

● Example of AC power supply connection

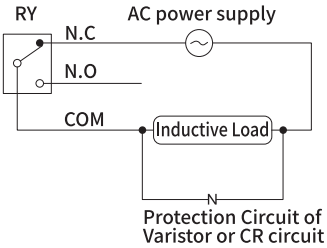

● Example of DC power supply connection

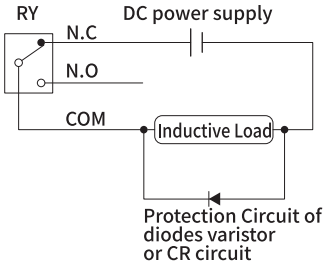

DESCRIPTION

This Slim-shaped Plug-in Isolated Alarm Setter (Dual Points), CP3705 functions to generate two independent relay contact ON/OFF outputs by comparing high level DC input signal with two pre-set trip points (higher and lower limits).

SPECIFICATIONS

■ INPUT SECTION

● Input	:	DC voltage or DC current (see "ORDERING INFORMATION")
● Input resistance	:	Voltage input: 1MΩmin. (1MΩ when power failure/constant input)
		Current input: 250Ω
● Input tolerable range	:	Voltage input: 30V DC
		Current input:40mA DC

■ OUTPUT SECTION

● Output Signal	:	Two independent form C relay contact closure signals
● Alarm action method:	:	High/Low Limit, High/High Limit, Low/Low Limit (see "ORDERING INFORMATION")
● Alarm setting method:	:	By front rotary switch
● Alarm setting range:	:	0 to 99% of input signal (adjustable in steps of 1%).
● Alarm setting resolution	:	1%FS
● Alarm setting accuracy	:	±0.5%FS
● Conversion accuracy:	:	Within ±0.1% at 25±5 °C
● Hysteresis	:	1.0%±0.3% of span
● Relay Indicator	:	The red LED lights up when the relay is activated.
● Relay Activation without Power	:	COM and NC are closed for each output.
● Relay Start-up Limitation	:	The relay gets ready for action about 2 seconds after power-up.

■ STANDARDS CONFORMITY

- Effect of ambient temperature : Within ±0.15% of span for 10 °C change.
- Input response speed: : 150m sec. max. (0 to 90%) at 100% step input
- Isolation : Isolation between input, output 1, output 2, and power.
- Insulation Resistance : 100MΩ min. (@ 500V DC) between input, output 1, output 2, power, and ground.
- Dielectric Strength : Input / Output 1 / Output 2 / [Power, Ground]: 2000V AC
  Power / Ground: 2000V AC
- Applicable standards : Safety IEC61010-1 and EN61010-1
  EMC EN61326-1
  RoHS directive supported
- Relay Contacts
  - Rated Load : 5A 125V AC, 5A 30V DC
  - Maximum Allowable Voltage : 250V AC, 30V DC
  - Allowable Voltage Maximum : 5A (NO) / 3A (NC)
  - Allowable Current Electrical Life : 5A, 250V AC (NO): 50 × 103 cycles (Frequency: 1,800 cycles/h)
    5A, 30V DC (NO): 100 × 103 cycles (Frequency: 1,800 cycles/h)
  - Mechanical Life : 5 × 106 cycles (Frequency: 18,000 cycles/h)

■ POWER SECTION

- Maximum power consumption : AC100V 4.5VA max.
  AC240V 6.5VA max.
  DC24V 2.0W max.

ORDERING INFORMATION

ITEMS	CODE	SPECIFICATIONS
SERIES	CP3705-	Alarm Setter (Dual Points)
INPUT	1	0 to 5V DC
	4	0 to 10V DC
	5	1 to 5V DC
	6	4 to 20mA DC
	9	Others (Please consult before ordering.)
ALARM ACTION	03	High/Low Limit Alarm
	07	Low/Low Limit Alarm
	08	High/High Limit Alarm
POWER SUPPLY	90-	100 to 240V AC ±10% 50/60Hz
	08-	24V DC ±10%
REMARKS	0	Without
	9	With (Please consult before ordering.)

Distributor (with Isolation)

CE approved

OVERVIEW

Block Diagram & Terminal Wiring

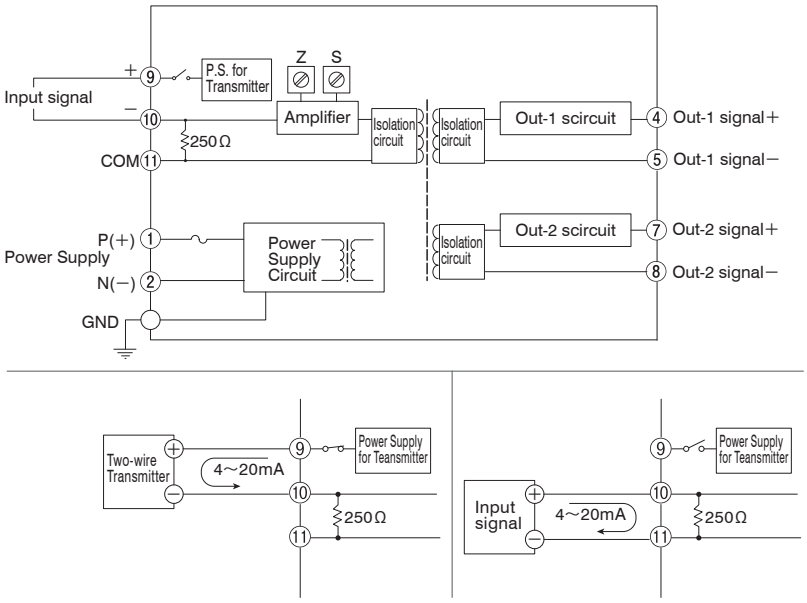

DESCRIPTION

This Slim-shaped Plug-in type Distributor, CP3707 functions to supply power to various types of Two-wire Transmitter and convert 4 to 20mA signal therefrom into any desired DC signal. It can also be used an isolation device (isolator).

SPECIFICATIONS

■ INPUT SECTION

● Input Signal	:	4 to 20mA DC from 2-wire transmitters
● Input resistance	:	250Ω
● Power supply to transmitter	:	Output voltage: 28.4V (typical)/at 0% input to 21.6V (typical)/at 100% input
	:	Max. current: 22mA (typical)
● Limiting Current for Short-Circuit Protection	:	40mA max.
● Permissible Short-Circuit Duration	:	Continuous.

■ OUTPUT SECTION

● Allowable Output Load	:	Voltage Output (DC) /	1V span min.	Load current: 2mA max.
			10mV span min.	Load resistance: 10kΩmin.
			100mV span min.	Load resistance: 100kΩmin.
	:	Current Output (DC) /	4 to 20mA single output	Load current: 750Ωmax.
			4 to 20mA dual output	Output 1: 550Ω max./Output 2: 350Ω max
● Conversion output variable range	:	Zero Adjustment	Approx. ±5% of span. (Adjustable by the front-accessible trimmer.)	
	:	Span Adjustment	Approx. ±5% of span. (Adjustable by the front-accessible trimmer.)	

■ STANDARDS CONFORMITY

● Conversion accuracy	:	Within ±0.1% at 25±5 °C
● Conversion output	:	DC voltage, current (see "ORDERING INFORMATION")
● Effect of ambient temperature	:	Within ±0.2% of span for a temperature change of 10 °C
● Response Time	:	85ms max. (0 to 90%) with a step input at 100%.
● Isolation	:	Between Input-Output 1-Output 2-Power-Ground
● Insulation Resistance	:	100MΩ min. (@ 500V DC) between input, output 1, output 2, power, and ground.
● Dielectric Strength	:	Input / [Output 1, Output 2] / [Power, Ground]: 2000V AC for 1 minute (Cutoff current: 0.5mA)
		Power / Ground: 2000V AC for 1 minute
		Output 1 / Output 2: 500V AC for 1 minute
● Applicable standards	:	Safety IEC61010-1 and EN61010-1
		EMC EN61326-1
		RoHS directive supported

■ **POWER SECTION**

● Maximum power consumption :

Power	2 Voltage Outputs	2 Current Outputs	Dual Output
AC100V	4VA max.	5.5VA max.	5.5VA max.
AC240V	5.5VA max.	7.5VA max.	7.5VA max.
DC24V	1.8W max.	2.3W max.	2.4W max.

ORDERING INFORMATION

ITEMS	CODE	SPECIFICATIONS	
SERIES	CP3707-	Distributor (with Isolation)	
OUTPUT 1		1	0 to 10mV DC
		2	0 to 100mV DC
		3	-10 to 10mV DC
		4	-100 to 100mV DC
		5	1 to 5V DC
		6	4 to 20mA DC
		7	0 to 5V DC
		8	0 to 10V DC
		9	Others (Please consult before ordering.)
OUTPUT 2		0	None
		1	0 to 10mV DC
		2	0 to 100mV DC
		3	- 10 to 10mV DC
		4	- 100 to 100mV DC
		5	1 to 5V DC
		6	4 to 20mA DC * Note: Available only when output 1 (4 to 20mA DC) is selected.
		7	0 to 5V DC
		8	0 to 10V DC
		9	Others (Please consult before ordering.)
POWER SUPPLY		90-	100 to 240V AC ±10% 50/60Hz
		08-	24V DC ±10%
REMARKS		0	Without
		9	With (Please consult before ordering.)

Frequency/DC Converter

OVERVIEW

Block Diagram & Terminal Wiring

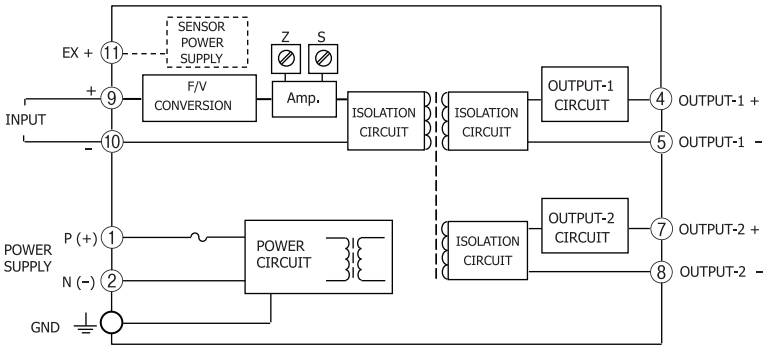

For dry contact or open collector input:

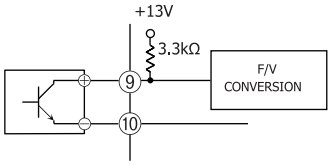

For voltage pulse input:

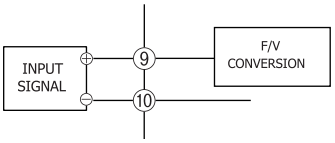

When a 2-wire sensor is used:

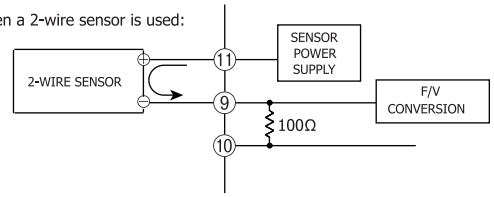

Note: The connections may vary depending on the type of the sensor used.

DESCRIPTION

The CP3708 is a slim, plug-in Frequency/DC Converter that converts pulse train signals from flow sensors and the like into commonly used DC signals and provides isolated single or dual output.

SPECIFICATIONS

■ INPUT SECTION

- Input resistance : Voltage input 1 MΩ or more (30 kΩ or more at power failure)
- Allowable input voltage : 30V DC max. continuous
- Input pulse width : 4 µs or more
- Duty Ratio : 40 to 60%

■ OUTPUT SECTION

- Allowable Output Load : Voltage Output (DC) / 1V span min. — Load current: 2mA max.
  10mV span min. — Load resistance: 10kΩmin.
  100mV span min. — Load resistance: 100kΩmin.
  : Current Output (DC) / 4 to 20mA single output — Load current: 750Ωmax.
  4 to 20mA dual output — Output 1: 550Ω max./Output 2: 350Ω max
- Conversion output variable range : Zero Adjustment — Approx. ±5% of span. (Adjustable by the front-accessible trimmer.)
  : Span Adjustment — Approx. ±5% of span. (Adjustable by the front-accessible trimmer.)

■ STANDARDS CONFORMITY

- Conversion accuracy : Within ±0.3% at 25±5 °C
- Effect of ambient temperature : Within ±0.2% of span for a temperature change of 10 °C
- Response Time : Input Frequency — 0 to 90% with a step input at 100%
  200 Hz — 1 second max.
  2 kHz max. — 500 ms max.
- Isolation : Between Input-Output 1-Output 2-Power-Ground

- Insulation Resistance : 100MΩ min. (@ 500V DC) between input, output 1, output 2, power, and ground.
- Dielectric Strength : Input / [Output 1, Output 2] / [Power, Ground]: 2000V AC
  Power / Ground: 2000V AC
  Output 1 / Output 2: 500V AC
- Applicable standards : RoHS directive supported

■ **POWER SECTION**

- Maximum power consumption :

Power	100 to 240V AC	24V DC
1 output type	8.3VA max.	2.6W max.
2 output type	9.0VA max.	3.0W max.

ORDERING INFORMATION

ITEMS	Code	SPECIFICATIONS
SERIES	CP3708-	Frequency/DC Converter
INPUT	1	Non-voltage contact, open collector (detection power supply approx. 13V)
	2	DC voltage pulse (threshold voltage approx. 2V)
	9	Others (Please consult before ordering.)
MEASURING RANGE	□□□	Select from the MEASUREMENT RANGE CODE selection table below
OUTPUT 1	1	0 to 10mV DC
	2	0 to 100mV DC
	3	0 to 1V DC
	4	0 to 10V DC
	5	0 to 5V DC
	6	1 to 5V DC
	7	4 to 20mA DC
	9	Others (Please consult before ordering.)
OUTPUT 2	0	None
	1	0 to 10mV DC
	2	0 to 100mV DC
	3	0 to 1V DC
	4	0 to 10V DC
	5	0 to 5V DC
	6	1 to 5V DC
	7	4 to 20mA DC * Note: Available only when output 1 (4 to 20mA DC) is selected.
	9	Others (Please consult before ordering.)
Power Supply	90 -	100 to 240V AC
	08 -	24V DC
REMARKS	0	Without
	9	With (Please consult before ordering.)

MEASURING RANGE CODES

Measuring Range	Code
0 to 200Hz	726
0 to 500Hz	750
0 to 1000Hz	810
0 to 2000Hz	820
0 to 5000Hz	841

Potentiometer Converter

OVERVIEW

CE approved

Block Diagram & Terminal Wiring

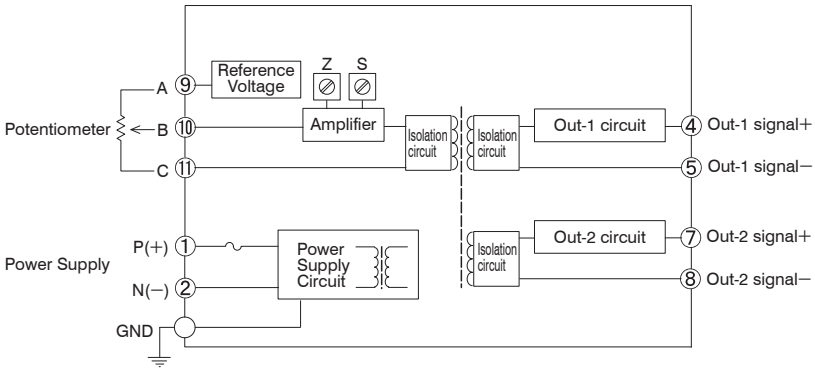

DESCRIPTION

This Slim-shaped Plug-in type Potentiometer Converter, CP3710 functions to detect the variation of resistance value of Potentiometer (slide rheostat) type sensor and convert same into any desired isolated No.1 and No. 2 (dual) DC output.

SPECIFICATIONS

■ INPUT SECTION

- Input : Potentiometer (3 wire system)
- Input resistance range : Within 0 to 100Ω and 0 to 10kΩ
- Allowable input lead wire resistance : 10% (per wire) FS max. of total resistance. (Resistance of each wire should be identical)

■ OUTPUT SECTION

- Allowable Output Load : Voltage Output (DC) / 1V span min. Load current: 2mA max.
  10mV span min. Load resistance: 10kΩmin.
  100mV span min. Load resistance: 100kΩmin.
  : Current Output (DC) / 4 to 20mA single output Load current: 750Ωmax.
  4 to 20mA dual output Output 1: 550Ω max./Output 2: 350Ω max
- Conversion output : DC voltage, current (see "ORDERING INFORMATION")
- Conversion output variable range : Zero Adjustment Approx. ±5% of span. (Adjustable by the front-accessible trimmer.)
  : Span Adjustment Approx. ±5% of span. (Adjustable by the front-accessible trimmer.)

■ STANDARDS CONFORMITY

- Conversion accuracy: : Within ±0.2% at 25±5 °C
- Effect of ambient temperature : Within ±0.2% of span for 10°C change.
- Response Time : 170ms max. (0 to 90%) with a step input at 100%
- Isolation : Between Input-Output 1-Output 2-Power-Ground
- Insulation Resistance : 100MΩ min. (@ 500V DC) between input, output 1, output 2, power, and ground.
- Dielectric Strength : Input / [Output 1, Output 2] / [Power, Ground]: 2000V AC .
  Power / Ground: 2000V AC
  Output 1 / Output 2: 500V AC
- Applicable standards : Safety IEC61010-1 and EN61010-1
  EMC EN61326-1
  RoHS directive supported

■ POWER SECTION

- Maximum power consumption :

Power	2 Voltage Outputs	2 Current Outputs	Dual Output
AC100V	3VA max.	4VA max.	45VA max.
AC240V	4.5VA max.	5.5VA max.	5.5VA max.
DC24V	1.0W max.	1.4W max.	1.5W max.

ORDERING INFORMATION

ITEMS	CODE	SPECIFICATIONS
SERIES	CP3710-	Potentiometer Converter
OUTPUT 1	1	0 to 10mV DC
	2	0 to 100mV DC
	3	-10 to 10mV DC
	4	-100 to 100mV DC
	5	1 to 5V DC
	6	4 to 20mA DC
	7	0 to 5V DC
	8	0 to 10V DC
	9	Others (Please consult before ordering.)
OUTPUT 2	0	None
	1	0 to 10mV DC
	2	0 to 100mV DC
	3	-10 to 10mV DC
	4	-100 to 100mV DC
	5	1 to 5V DC
	6	4 to 20mA DC * Note: Available only when output 1 (4 to 20mA DC) is selected.
	7	0 to 5V DC
	8	0 to 10V DC
	9	Others (Please consult before ordering.)
POWER SUPPLY	90-	100 to 240V AC ±10% 50/60Hz
	08-	24V DC ±10%
REMARKS	0	Without
	9	With (Please consult before ordering.)

Square-Root Extractor

OVERVIEW

Block Diagram & Terminal Wiring

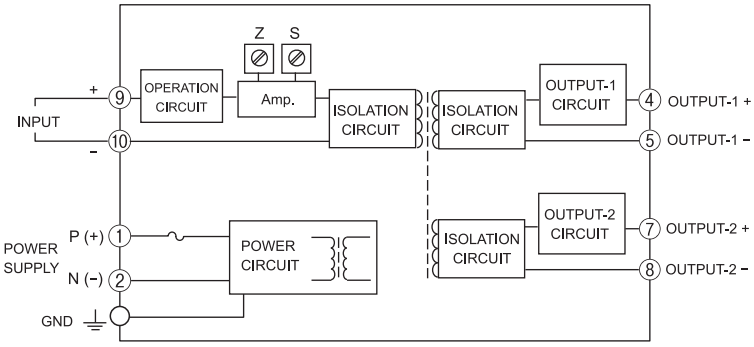

DESCRIPTION

The CP3713 is a slim, plug-in Square-Root Extractor that extracts the square roots of DC current or voltage signals, converts them into commonly used DC signals and provides isolated single or dual output.

SPECIFICATIONS

■ INPUT SECTION

● Input Resistance

Voltage Input (DC)	:	With or without power: 1MΩ min.
Current Input (DC)	:	250Ω

● Allowable Input Voltage

Voltage Input Mode	:	30V DC max., continuous. (Standard for a span up to 10V)
Current Input Model	:	40mA DC max., continuous. (Standard for 4 to 20mA)

■ OUTPUT SECTION

● Allowable Output Load	:	Voltage Output (DC) /	1V span min.	Load current: 2mA max.
			10mV span min.	Load resistance: 10kΩmin.
			100mV span min.	Load resistance: 100kΩmin.
	:	Current Output (DC) /	4 to 20mA single output	Load current: 750Ωmax.
			4 to 20mA dual output	Output 1: 550Ω max./Output 2: 350Ω max
● Conversion output variable range	:	Zero Adjustment	Approx. ±5% of span. (Adjustable by the front-accessible trimmer.)	
	:	Span Adjustment	Approx. ±5% of span. (Adjustable by the front-accessible trimmer.)	

● Square-Root Extraction : $X = 10\sqrt{Y}$

where

X = Output signal (0 to 100%)

Y = Input signal (0 to 100%)

Note: The cutoff function works when the output reaches 8%±1%.

■ STANDARDS CONFORMITY

● Conversion accuracy:	:	Within ±0.2% at 25±5 °C
● Effect of ambient temperature	:	Within ±0.2% of span for 10°C change.
● Response Time	:	120ms max.
● Isolation	:	Between Input-Output 1-Output 2-Power-Ground
● Insulation Resistance	:	100MΩ min. (@ 500V DC) between input, output 1, output 2, power, and ground.
● Dielectric Strength	:	Input / [Output 1, Output 2] / [Power, Ground]: 2000V AC Power / Ground: 2000V AC Output 1 / Output 2: 500V AC
● Applicable standards	:	RoHS directive supported

■ **POWER SECTION**

● Maximum power consumption :

Power	AC100 to 240V	DC24V
1 output type	5.5VA max	1.6W max
2 output type	6.0VA max	2.0W max

ORDERING INFORMATION

ITEMS	CODE	SPECIFICATIONS
SERIES	CP3713-	Square-Root Extractor
Input	3	0 to 1V DC
	4	0 to 10V DC
	5	0 to 5V DC
	6	1 to 5V DC
	7	4 to 20mA DC
	9	Others (Please consult before ordering.)
OUTPUT 1	1	0 to 10mV DC
	2	0 to 100mV DC
	3	0 to 1V DC
	4	0 to 10V DC
	5	0 to 5V DC
	6	1 to 5V DC
	7	4 to 20mA DC
	9	Others (Please consult before ordering.)
OUTPUT 2	0	None
	1	0 to 10mV DC
	2	0 to 100mV DC
	3	0 to 1V DC
	4	0 to 10V DC
	5	0 to 5V DC
	6	1 to 5V DC
	7	4 to 20mA DC * Note: Available only when output 1 (4 to 20mA DC) is selected.
	9	Others (Please consult before ordering.)
Power Supply	90-	100 to 240V AC
	08-	24V DC
REMARKS	0	Without
	9	With (Please consult before ordering.)

$OUT1 \cdot 2\ (\%) = 10 \times \sqrt{IN\ (\%)}$

Operates at 8% max. low cut of conversion output.

Limiter

OVERVIEW

CE approved

Block Diagram & Terminal Wiring

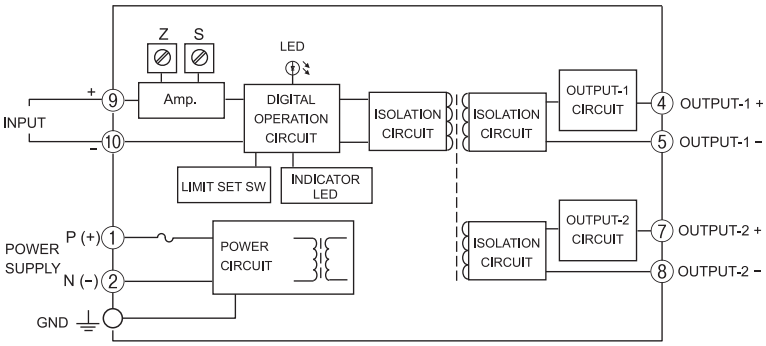

DESCRIPTION

The CP3714 is a slim, plug-in Limiter that converts DC current or voltage signals into commonly used DC signals, limits the outputs to force them to fall within the range between user-defined upper and lower limits, and provides isolated single or dual output.

SPECIFICATIONS

■ INPUT SECTION

● Calculation method	:	OUT (%) = IN (%) Signal limit -10 to 105% for both upper and lower limits (0.1% step, 1% step for 100% or more)
● Input Resistance		
Voltage Input (DC)	:	With or without power: 1MΩ min.
Current Input (DC)	:	250Ω
● Allowable Input Voltage		
Voltage Input Mode	:	30V DC max., continuous. (Standard for a span up to 10V)
Current Input Model	:	40mA DC max., continuous. (Standard for 4 to 20mA)

■ OUTPUT SECTION

● Allowable Output Load	:	Voltage Output (DC) /	1V span min.	Load current: 2mA max.
			10mV span min.	Load resistance: 10kΩmin.
			100mV span min.	Load resistance: 100kΩmin.
	:	Current Output (DC) /	4 to 20mA single output	Load current: 750Ωmax.
			4 to 20mA dual output	Output 1: 550Ω max./Output 2: 350Ω max
● Conversion output variable range	:	Zero Adjustment	Approx. ±5% of span. (Adjustable by the front-accessible trimmer.)	
	:	Span Adjustment	Approx. ±5% of span. (Adjustable by the front-accessible trimmer.)	
● Limit Setting Range	:	-10 to 105% for both upper and lower limits (in steps of 0.1%; but 1% for the range over 100%).		

■ STANDARDS CONFORMITY

● Conversion accuracy:	:	Within ±0.2% at 25±5 °C
● Limit setting accuracy	:	Within ±0.2% at 25±5 °C
● Effect of ambient temperature	:	Within ±0.15% span for 10°C change.
● Response Time	:	85ms max. (0 to 90%) with a step input at 100%.
● Isolation	:	Between Input-Output 1-Output 2-Power-Ground
● Insulation Resistance	:	100MΩ min. (@ 500V DC) between input, output 1, output 2, power, and ground.
● Dielectric Strength	:	Input / [Output 1, Output 2] / [Power, Ground]: 2000V AC Power / Ground: 2000V AC Output 1 / Output 2: 500V AC

● Applicable standards : Safety IEC61010-1 and EN61010-1
EMC EN61326-1
RoHS directive supported

■ **POWER SECTION**

● Maximum power consumption :

Power	AC100 to 240V	DC24V
1 output type	6.0VA max	1.7W max
2 output type	6.5VA max	2.1W max

ORDERING INFORMATION

ITEMS	CODE	SPECIFICATIONS
SERIES	CP3714 -	Limiter
INPUT	3	0 to 1V DC
	4	0 to 10V DC
	5	0 to 5V DC
	6	1 to 5V DC
	7	4 to 20mA DC
	9	Others (Please consult before ordering.)
OUTPUT 1	1	0 to 10mV DC
	2	0 to 100mV DC
	3	0 to 1V DC
	4	0 to 10V DC
	5	0 to 5V DC
	6	1 to 5V DC
	7	4 to 20mA DC
	9	Others (Please consult before ordering.)
OUTPUT 2	0	None
	1	0 to 10mV DC
	2	0 to 100mV DC
	3	0 to 1V DC
	4	0 to 10V DC
	5	0 to 5V DC
	6	1 to 5V DC
	7	4 to 20mA DC * Note: Available only when output 1 (4 to 20mA DC) is selected.
	9	Others (Please consult before ordering.)
POWER SUPPLY	90 -	100 to240V AC
	08 -	24V DC
REMARKS	0	Without
	9	With (Please consult before ordering.)

FRONT VIEW

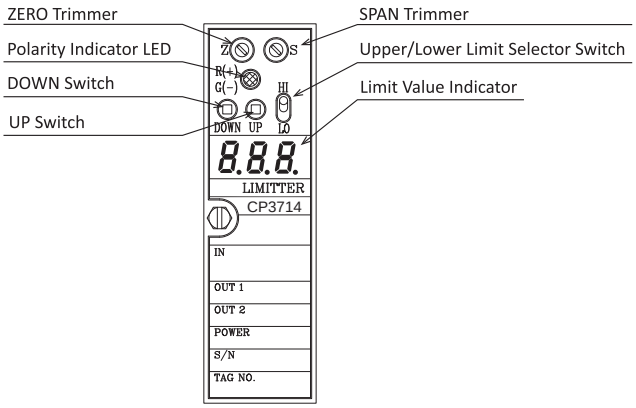

Change-rate Limiting Converter

OVERVIEW

Block Diagram & Terminal Wiring

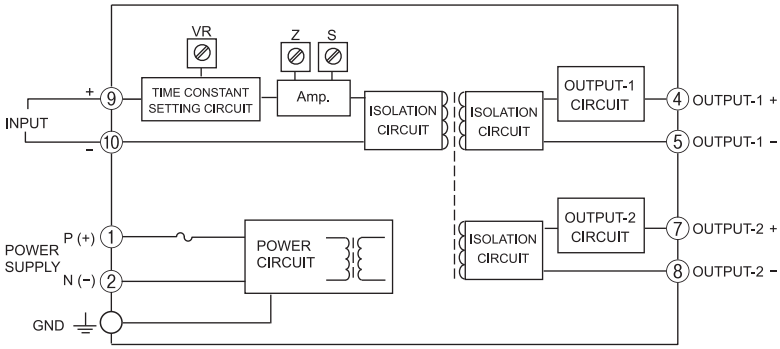

DESCRIPTION

The CP3716 is a slim, plug-in Change-rate Limiting Converter that adds a first-order delay to DC current or voltage input signals, converts them into commonly used DC signals, and provides isolated single or dual output.

SPECIFICATIONS

■ INPUT SECTION

- Input Resistance
  - Voltage Input (DC) : With or without power: 1MΩ min.
  - Current Input (DC) : 250Ω
- Allowable Input Voltage
  - Voltage Input Mode : 30V DC max., continuous. (Standard for a span up to 10V)
  - Current Input Model : 40mA DC max., continuous. (Standard for 4 to 20mA)
- Time Constant Setting Range : A time constant setting range should be specified between 0.2 and 20 seconds.
- Time Constant Setting Trimmer : Rotation of up to 260°

■ OUTPUT SECTION

- Allowable Output Load : Voltage Output (DC) / 1V span min. — Load current: 2mA max.
  - 10mV span min. — Load resistance: 10kΩmin.
  - 100mV span min. — Load resistance: 100kΩmin.
  - : Current Output (DC) / 4 to 20mA single output — Load current: 750Ωmax.
  - 4 to 20mA dual output — Output 1: 550Ω max./Output 2: 350Ω max
- Conversion output variable range : Zero Adjustment — Approx. ±5% of span. (Adjustable by the front-accessible trimmer.)
  - : Span Adjustment — Approx. ±5% of span. (Adjustable by the front-accessible trimmer.)

■ STANDARDS CONFORMITY

- Conversion accuracy: : Within ±0.1% at 25±5 °C
- Effect of ambient temperature : Within ±0.2% of span for 10°C change.
- Isolation : Between Input-Output 1-Output 2-Power-Ground
- Insulation Resistance : 100MΩ min. (@ 500V DC) between input, output 1, output 2, power, and ground.
- Dielectric Strength : Input / [Output 1, Output 2] / [Power, Ground]: 2000V AC
  - Power / Ground: 2000V AC
  - Output 1 / Output 2: 500V AC
- Applicable standards : RoHS directive supported

■ POWER SECTION

- Maximum power consumption :

Power	AC100 to 240V	DC24V
1 output type	5.0VA max	1.4W max
2 output type	6.0VA max	1.8W max

ORDERING INFORMATION

ITEMS	CODE	SPECIFICATIONS
SERIES	CP3716 -	Change-rate Limiting Converter
INPUT	3	0 to 1V DC
	4	0 to 10V DC
	5	0 to 5V DC
	6	1 to 5V DC
	7	4 to 20mA DC
	9	Others (Please consult before ordering.)
OUTPUT 1	1	0 to 10mV DC
	2	0 to 100mV DC
	3	0 to 1V DC
	4	0 to 10V DC
	5	0 to 5V DC
	6	1 to 5V DC
	7	4 to 20mA DC
	9	Others (Please consult before ordering.)
OUTPUT 2	0	None
	1	0 to 10mV DC
	2	0 to 100mV DC
	3	0 to 1V DC
	4	0 to 10V DC
	5	0 to 5V DC
	6	1 to 5V DC
	7	4 to 20mA DC * Note: Available only when output 1 (4 to 20mA DC) is selected.
	9	Others (Please consult before ordering.)
POWER SUPPLY	90 -	100 to 240V AC
	08 -	24V DC
REMARKS	0	Without
	9	With (Please consult before ordering.)

CT Transmitter (Rms Calculation)

OVERVIEW

CE approved

Block Diagram & Terminal Wiring

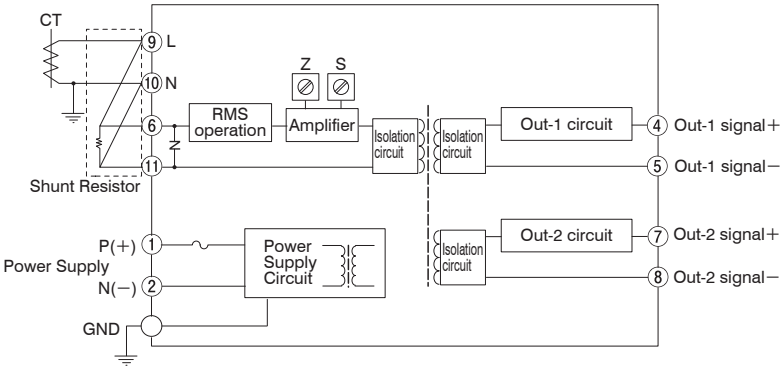

DESCRIPTION

CP3720 performs conditioning of AC current signal from CT to output the corresponding DC signals.

SPECIFICATIONS

■ INPUT SECTION

● Input	:	AC current by CT output (see "ORDERING INFORMATION")
● Input Resistance	:	5A AC input: 2mΩ (Shunt resistor)
		1A AC input: 10mΩ (Shunt resistor)
● Input Frequency	:	50/60 Hz
● Allowable Input Current	:	Continuous: 120% of the rated input value
		Instantaneous: 10 times the rated input value (within 3 seconds)
● Crest factor	:	3 max.

■ OUTPUT SECTION

● Allowable Output Load	:	Voltage Output (DC) /	1V span min.	Load current: 2mA max.
			10mV span min.	Load resistance: 10kΩmin.
			100mV span min.	Load resistance: 100kΩmin.
	:	Current Output (DC) /	4 to 20mA single output	Load current: 750Ωmax.
			4 to 20mA dual output	Output 1: 550Ω max./Output 2: 350Ω max
● Conversion output variable range	:	Zero Adjustment	Approx. ±5% of span. (Adjustable by the front-accessible trimmer.)	
	:	Span Adjustment	Approx. ±5% of span. (Adjustable by the front-accessible trimmer.)	

■ STANDARDS CONFORMITY

● Conversion accuracy	:	Within ±0.2% at 25±5 °C
● Conversion output	:	DC voltage, current (see "ORDERING INFORMATION")
● Effect of ambient temperature	:	Within ±0.2% of span for 10°C change.
● Response speed	:	400m sec. max. (0 to 90%) at 100% step input
● Isolation	:	Between Input-Output 1-Output 2-Power-Ground
● Insulation Resistance	:	100MΩ min. (@ 500V DC) between input, output 1, output 2, power, and ground.
● Dielectric Strength	:	Input / [Output 1, Output 2] / [Power, Ground]: 2000V AC
		Power / Ground: 2000V AC
		Output 1 / Output 2: 500V AC
● Applicable standards	:	Safety IEC61010-1 and EN61010-1
		EMC EN61326-1
		RoHS directive supported

■ **POWER SECTION**

● Maximum power consumption :

Power	2 Voltage Outputs	2 Current Outputs	Dual Output
AC100V	3VA max.	4VA max.	4VA max.
AC240V	4.5VA max.	5.5VA max.	5.5VA max.
DC24V	1.1W max.	1.5W max.	1.6W max.

ORDERING INFORMATION

ITEMS	CODE	SPECIFICATIONS
SERIES	CP3720-	CT Transmitter (Rms Calculation)
INPUT	21	0 to 1A AC
	22	0 to 5A AC
OUTPUT 1	1	0 to 10mV DC
	2	0 to 100mV DC
	3	-10 to 10mV DC
	4	-100 to 100mV DC
	5	1 to 5V DC
	6	4 to 20mA DC
	7	0 to 5V DC
	8	0 to 10V DC
	9	Others (Please consult before ordering.)
OUTPUT 2	0	None
	1	0 to 10mV DC
	2	0 to 100mV DC
	3	- 10 to 10mV DC
	4	- 100 to 100mV DC
	5	1 to 5V DC
	6	4 to 20mA DC * Note: Available only when output 1 (4 to 20mA DC) is selected.
	7	0 to 5V DC
	8	0 to 10V DC
	9	Others (Please consult before ordering.)
POWER SUPPLY	90-	100 to 240V AC ±10% 50/60Hz
	08-	24V DC ±10%
REMARKS	0	Without
	9	With (Please consult before ordering.)

PT Transmitter (Rms Calculation)

CE approved

Block Diagram & Terminal Wiring

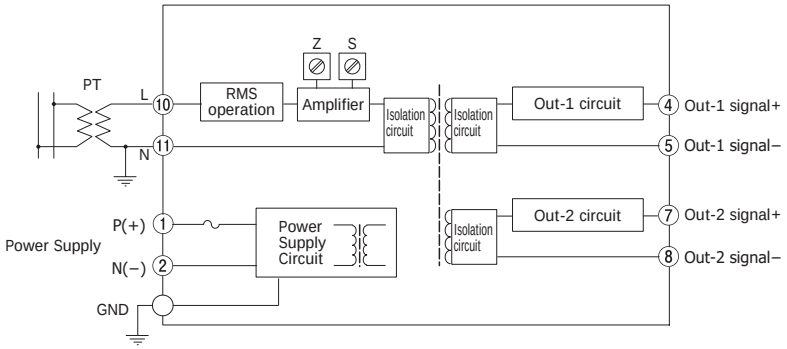

OVERVIEW

DESCRIPTION

CP3721 performs conditioning of AC voltage signal from PT to output the corresponding DC signals.

SPECIFICATIONS

■ INPUT SECTION

- Input : AC voltage (see "ORDERING INFORMATION")
- Input resistance : 1MΩmin. (1MΩ minimum without power)
- Input frequency : 50/60Hz
- Allowable input current : ontinuous, 120% of rated input value
  : Instantanuous, 1.5 times rated input value (5 sec.)
- Crest factor : 3 max.

■ OUTPUT SECTION

- Allowable Output Load : Voltage Output (DC) / 1V span min. Load current: 2mA max.
  10mV span min. Load resistance: 10kΩmin.
  100mV span min. Load resistance: 100kΩmin.
  : Current Output (DC) / 4 to 20mA single output Load current: 750Ωmax.
  4 to 20mA dual output Output 1: 550Ω max./Output 2: 350Ω max
- Conversion output variable range : Zero Adjustment Approx. ±5% of span. (Adjustable by the front-accessible trimmer.)
  : Span Adjustment Approx. ±5% of span. (Adjustable by the front-accessible trimmer.)

■ STANDARDS CONFORMITY

- Conversion accuracy : Within ±0.2% at 25±5 °C
- Conversion output : DC voltage, current (see "ORDERING INFORMATION")
- Effect of ambient temperature : Within ±0.2% of span for 10 °C change.
- Response Speed : 400 ms or less (0 to 90%) at 100% step input
- Isolation : Between Input-Output 1-Output 2-Power-Ground
- Insulation Resistance : 100MΩ min. (@ 500V DC) between input, output 1, output 2, power, and ground.
- Dielectric Strength : Input / [Output 1, Output 2] / [Power, Ground]: 2000V AC
  Power / Ground: 2000V AC
  Output 1 / Output 2: 500V AC
- Applicable standards : Safety IEC61010-1 and EN61010-1
  EMC EN61326-1
  RoHS directive supported

■ POWER SECTION

- Maximum power consumption :

Power	2 Voltage Outputs	2 Current Outputs	Dual Output
AC100V	3VA max.	4VA max.	4VA max.
AC240V	4.5VA max.	5.5VA max.	5.5VA max.
DC24V	1.1W max.	1.5W max.	1.6W max.

ORDERING INFORMATION

ITEMS	CODE	SPECIFICATIONS
SERIES	CP3721-	PT Transmitter (Rms Calculation)
INPUT	01	0 to 110V AC, 50/60Hz
	02	0 to 150V AC, 50/60Hz
	04	0 to 250V AC, 50/60Hz
	99	Others (Please consult before ordering.)
OUTPUT 1	1	0 to 10mV DC
	2	0 to 100mV DC
	3	-10 to 10mV DC
	4	-100 to 100mV DC
	5	1 to 5V DC
	6	4 to 20mA DC
	7	0 to 5V DC
	8	0 to 10V DC
	9	Others (Please consult before ordering.)
OUTPUT 2	0	None
	1	0 to 10mV DC
	2	0 to 100mV DC
	3	- 10 to 10mV DC
	4	- 100 to 100mV DC
	5	1 to 5V DC
	6	4 to 20mA DC * Note: Available only when output 1 (4 to 20mA DC) is selected.
	7	0 to 5V DC
	8	0 to 10V DC
	9	Others (Please consult before ordering.)
POWER SUPPLY	90-	100 to 240V AC ±10% 50/60Hz
	08-	24V DC ±10%
REMARKS	0	Without
	9	With (Please consult before ordering.)

High/Low Selector

CE approved

Block Diagram & Terminal Wiring

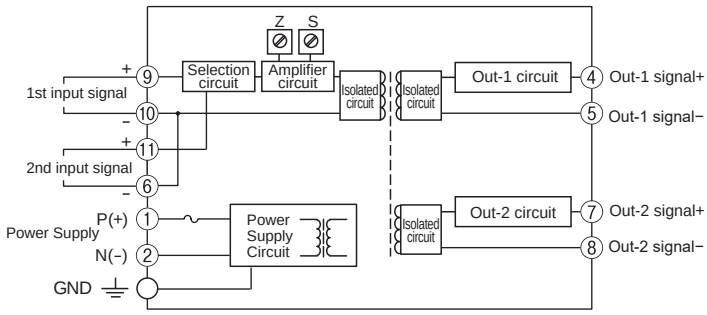

OVERVIEW

■ Input DC signals at two points and output either the larger value or the smaller value.

SPECIFICATIONS

■ INPUT SECTION

● Input Resistance	:	Voltage Input (DC)	With or without power: 1MΩ min.
		Current Input (DC)	250Ω
● Allowable Input Voltage	:	Voltage Input (DC)	30V DC max., continuous. (Standard for a span up to 10V)
		Current Input (DC)	40mA DC max., continuous.(Standard for 4 to 20mA)

■ OUTPUT SECTION

● Allowable Output Load	:	Voltage Input (DC)	1V span min. 2mA max.
			10mV span min. 10kΩ min.
			100mV span min. 100kΩ min.
	:	Current Input (DC)	4 to 20mA single output 750Ω max
			4-20mA dual output Output 1: 550Ω max. Output 2: 350Ω max.
● Conversion output variable range		Zero Adjustment	Approx. ±5% of span. (Adjustable by the front-accessible trimmer.)
		Span Adjustment	Approx. ±5% of span. (Adjustable by the front-accessible trimmer.)

■ STANDARDS CONFORMITY

● Conversion accuracy	:	Within ±0.1% at 25±5 °C
● Effect of ambient temperature	:	Within ±0.2% of span for 10°C change
● Response speed	:	85ms or less (0-90%) at 100% step input
● Insulation	:	Between Input-Output 1-Output 2-Power-Ground
● Insulation Resistance	:	100MΩ min. (@ 500V DC) between input, output 1, output 2, power, and ground
●Dielectric Strength	:	Input / [Output 1, Output 2] / [Power, Ground]: 2000V AC
		Power / Ground: 2000V AC
		Output 1 / Output 2: 500V AC
● Applicable standards	:	Safety IEC61010-1 and EN61010-1
		EMC EN61326-1
		RoHS directive supported

■ POWER SECTION

● Power Consumption :

Power	AC100 to 240V	DC24V
1 output type	4.5VA max	1.4W max
2 output type	5.5VA max	1.7W max

ORDERING INFORMATION

ITEMS	CODE	SPECIFICATIONS
SERIES	CP3725 -	High/Low Selector
Operation	H	High Selector
	L	Low Selector
Input	3	0 to 1V DC
	4	0 to 10V DC
	5	0 to 5V DC
	6	1 to 5V DC
	7	4 to 20mA DC
	9	Others (Please consult before ordering.)
Output 1	1	0 to 10mV DC
	2	0 to 100mV DC
	3	0 to 1V DC
	4	0 to 10V DC
	5	0 to 5V DC
	6	1 to 5V DC
	7	4 to 20mA DC
	9	Others (Please consult before ordering.)
Output 2	0	None
	1	0 to 10mV DC
	2	0 to 100mV DC
	3	0 to 1V DC
	4	0 to 10V DC
	5	0 to 5V DC
	6	1 to 5V DC
	7	4 to 20mA DC *Selectable only when output 1 is 4 to 20mA DC
	9	Others (Please consult before ordering.)
POWER SUPPLY	90 -	100 to 240V AC ±10% 50/60Hz
	08 -	24V DC ±10%
REMARKS	0	Without
	9	With (Please consult before ordering.)

DC-Frequency (Pulse) Converter

OVERVIEW

Block Diagram & Terminal Wiring

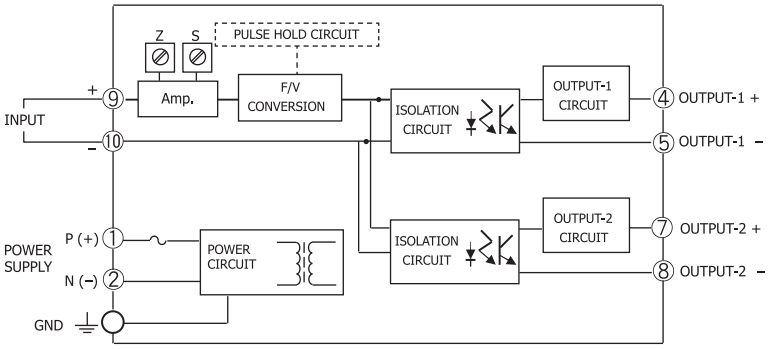

Note: When an inductive load, such as an electric motor, is connected to the photo MOS relay output, a relay contact protection circuit must be connected across the load.

Example of AC power connection:

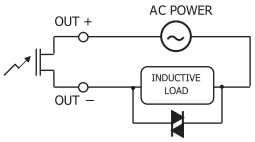

Protection circuit such as a varistor and CR circuit

Example of DC power connection:

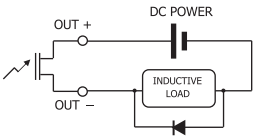

Protection circuit such as a diode, varistor and CR circuit

DESCRIPTION

The CP3729 is a slim, plug-in DC-Frequency (Pulse) Converter that converts DC current or voltage signals into pulse train signals. The unit provides isolated single or dual output.

SPECIFICATIONS

■ INPUT SECTION

- Input resistance : Voltage / input 1 MΩ or more
  Current / input 250Ω
- Input tolerance : Voltage / input 30V DC max. continuous
  Current / input 40mA DC max. continuous

■ OUTPUT SECTION

- Conversion output variable range : Zero Adjustment Approx. ±5% of span. (Adjustable by the front-accessible trimmer.)
  : Span Adjustment Approx. ±5% of span. (Adjustable by the front-accessible trimmer.)
- Maximum Rating
  Open Collector : Maximum rating: 30V, 100mA (Resistive load)
  Photo MOS Relay : Maximum load voltage: 400V (Peak AC)
  Maximum continuous load current: 0.15A (Peak AC)
  Peak load current: 0.5A @ 100ms (1 shot) DC
  Maximum output power dissipation: 360mW
  ON resistance: 16Ω max.
  Off-state leakage current: 1μA max.
- Duty Ratio without Pulse Hold Function : 40 to 60%

■ STANDARDS CONFORMITY

- Conversion accuracy : Within ±0.1% at 25±5 °C
- Effect of ambient temperature : Within ±0.2% of span for 10 °C change
- Response Time : Output Frequency
  50Hz / 65ms max.
  500Hz min. / 35ms max.

- Isolation : 4-way isolation between input, output 1, output 2, and power
- Insulation Resistance : 100MΩ min. (@ 500V DC) between input, output 1, output 2, power, and ground.
- Dielectric Strength : Input / [Output 1, Output 2] / [Power, Ground]: 2000V AC.
  Power / Ground: 2000V AC
  Output 1 / Output 2: 500V AC
- Applicable standards : RoHS directive supported

■ **POWER SECTION**

- Maximum power consumptio :

Power	AC100 to 240V	DC24V
1 output type	3.5VA max.	1.0W max.
2 output type	4.0VA max.	1.2W max.

ORDERING INFORMATION

ITEMS	CODE	SPECIFICATIONS		
SERIES	CP3729 -	DC-Frequency (Pulse) Converter		
SERIES		3	0 to 1V DC	
		4	0 to 10V DC	
		5	0 to 5V DC	
		6	1 to 5V DC	
		7	4 to 20mA DC	
		9	Others (Please consult before ordering.)	
OUTPUT 1		1	Open collector / 30V, 100mA (Resistive load)	
		2	Photo MOS relay / AC: 400V, 0.15A / DC:0.5A	
OUTPUT 2		0	None	
		1	Open collector / 30V, 100mA (Resistive load)	* Selectable only when output 1 is 1 (open collector)
		2	Photo MOS relay / AC: 400V,0.15A / DC:0.5A	* Selectable only when output 1 is 2 (photo MOS relay)
OUTPUT FREQUENCY RANGE		□□□	Selectable from the frequency code selection table below	
Power Supply		90 -	100 to 240V AC ±10% 50/60Hz	
		08 -	24V DC ±10%	
REMARKS		0	Without	
		9	With (Please consult before ordering.)	

■ Frequency range code selection table
(Open collector)

Measuring Range	CODE
0 to 10Hz	701
0 to 20Hz	704
0 to 50Hz	711
0 to 100Hz	719
0 to 200Hz	726
0 to 500Hz	750
0 to 1000Hz	810
0 to 2000Hz	820
0 to 5000Hz	841

■ Frequency range code selection table
(Photo MOS relay)

Measuring Range	CODE
0 to 10Hz	701
0 to 20Hz	704
0 to 30Hz	707

Distributor (Non-Isolation between Input and Output)

CE approved

Block Diagram & Terminal Wiring

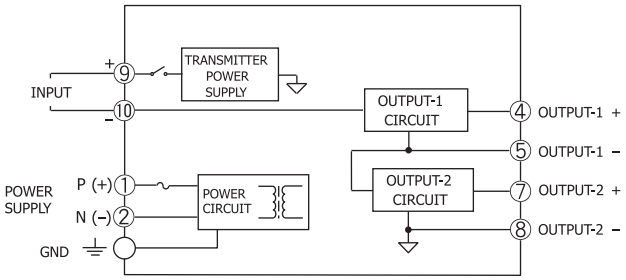

OVERVIEW

DESCRIPTION

The CP3737 is a slim plug-in Distributor that powers a two-wire transmitter, converts its 4 to 20mA signals into commonly used DC signals, and provides a dual output.

This model has no isolation between the input and output, providing a low-cost design. (The unit includes a transmitter power ON/OFF switch.)

SPECIFICATIONS

■ INPUT SECTION

● Input Signal	:	4 to 20mA DC from 2-wire transmitters
● Input Resistance	:	250Ω
● Transmitter Power Supply		
Output voltage	:	26.4V, typical. with 0% input 21.6V, typical. with 100% input (Output 2: short)
Maximum current	:	22mA, typical.
● Limit Current for Short-Circuit Protection	:	40mA max.
● Permissible Short-Circuit Duration	:	Continuous.

Note: If the transmitter power supply is used for sensor excitation, the sensor should be connected between the terminals INPUT (+) and OUTPUT-2 (-), while the OUTPUT-2 terminals (+) and (-) should be kept open.

■ OUTPUT SECTION

● Output Signal	:	Output 1: 1 to 5V DC
		Output 2: 4 to 20mA DC
● Allowable Load Resistance	:	Output 1: 250kΩ min.
		Output 2: 10Ω max.
		(Up to 260Ω is allowable if the plus and minus terminals of OUTPUT-1 are short connected.)

■ STANDARDS CONFORMITY

● Conversion accuracy	:	Within ±0.1% (Depends on accuracy of receiving resistor)
● Effect of ambient temperature	:	Within ±0.03% of span for 10°C change (temperature coefficient of receiving resistor)
● Isolation	:	Between Input-Output 1-Output 2-Power-Ground
● Insulation Resistance	:	100MΩ min. (@ 500V DC) between input, output 1, output 2, power, and ground.
● Dielectric Strength	:	[Input, Output 1, Output 2] / [Power, Ground]: 2000V AC
		Power / Ground: 2000V AC
● Applicable standards	:	Safety IEC61010-1 and EN61010-1
		EMC EN61326-1
		RoHS directive supported

■ POWER SECTION

● Maximum power consumption	:	AC100 to 240V / 5.0VA max.
		DC24V / 1.5W max.

ORDERING INFORMATION

ITEMS	CODE	SPECIFICATIONS	
SERIES	CP3737 -	Distributor (Non-Isolation between Input and Output)	
POWER SUPPLY		90 -	100 to 240V AC
		08 -	24V DC
REMARKS		0	Without
		9	With (Please consult before ordering.)

Manual Setter

Block Diagram & Terminal Wiring

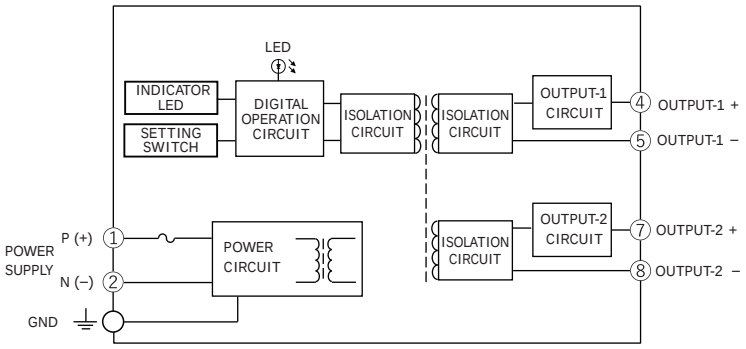

DESCRIPTION

Outputs any DC signal by manual setting. (Please specify the output range)

RoHS directive supported

SPECIFICATIONS

■ OUTPUT SECTION

● Allowable Output Load : Voltage Output (DC) 1V span min. 2mA max.
10mV span min. 10kΩ min.
100mV span min. 100kΩ min.
Current Output (DC) 4 to 20mA single output 750Ω max.
4 to 20mA dual output Output 1: 550Ω max. Output 2: 350Ω max.

● Output Setting Range : 10 to 105%
(adjustable in steps of 0.1%; in steps of 1% for the range over 100% by the front-accessible switches.)

■ STANDARDS CONFORMITY

● Accuracy Rating : Within ±0.1% of span (at 25°C±5°C).

● Effect of ambient temperature : Within ±0.15% of span for 10°C change .

● Isolation : Isolation between output 1, output 2, and power.

● Dielectric Strength : [Output 1, Output 2] / [Power, Ground]: 2000V AC
Power / Ground: 2000V AC
Output 1 / Output 2: 500V AC

● Applicable standards : RoHS directive supported

■ POWER SECTION

● Maximum power consumption :

Power	AC100 to 240V	DC24V
1 output type	6.0VA max.	1.7W max.
2 output type	6.5VA max.	2.1W max.

ORDERING INFORMATION

ITEMS	CODE	SPECIFICATIONS
SERIES	CP3738 -	Manual Setter
Setting range	1	0 to 100 %
OUTPUT 1	1	0 to 10mV DC
	2	0 to 100mV DC
	3	0 to 1V DC
	4	0 to 10V DC
	5	0 to 5V DC
	6	1 to 5V DC
	7	4 to 20mA DC
	9	Others (Please consult before ordering.)
OUTPUT 2	0	None
	1	0 to 10mV DC
	2	0 to 100mV DC
	3	0 to 1V DC
	4	0 to 10V DC
	5	0 to 5V DC
	6	1 to 5V DC
	7	4 to 20mA DC *Selectable only when output 1 is 4 to 20mA DC
	9	Others (Please consult before ordering.)
Power Supply	90 -	100 to 240V AC ±10% 50/60Hz
	08 -	24V DC ±10%
REMARKS	0	Without
	9	With (Please consult before ordering.)

FRONT VIEW

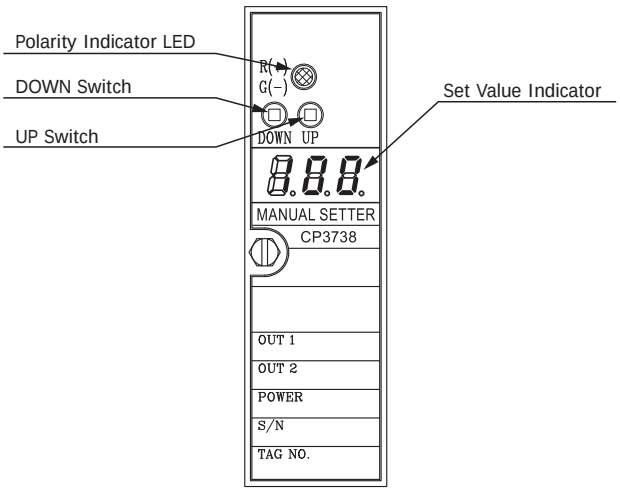

Ratio/Bias Converter

CE approved

Block Diagram & Terminal Wiring

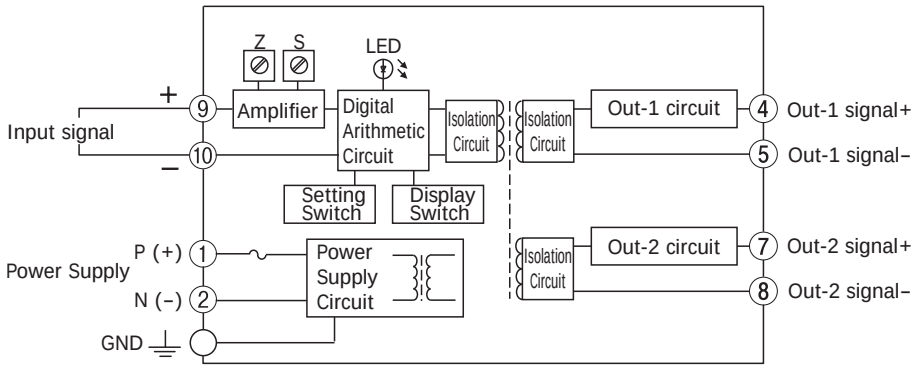

DESCRIPTION

Multiplies the input signal by a ratio and outputs it. You can also set the bias value

SPECIFICATIONS

■ INPUT SECTION

● Input Resistance : Voltage Input (DC) With or without power: 1MΩ min.
Current Input (DC) 250Ω

● Allowable Input Voltage : Voltage Input (DC) 30V DC max., continuous. (Standard for a span up to 10V)
Current Input (DC) 40mA DC max., continuous.(Standard for 4 to 20mA)

■ OUTPUT SECTION

● Ratio setting range : Positive slope: 0.1 to 4.00 (0.01 step)
Negative slope: -0.1 to -4.00 (0.01 step)

● Bias setting range : -100 to 100% (1% step)

● Output range : Approx. -10 to 120% (at 1 to 5V DC)

■ STANDARDS CONFORMITY

● Conversion accuracy : Within ±0.2% (at 25°C±5°C)
When ratio = 1, bias = 0% (positive slope)
When ratio = -1, bias = 0% (negative slope)

● Effect of ambient temperature Within ±0.15% of span for 10 °C change

● Response speed : 85ms or less (0 to 90%) at 100% step input

● Arithmetic expression : Y=KX+B (positive slope)
Y=KX+B+F (negative slope)
Y: Output (%) B: Bias
K: Ratio F: 100%
X: Input (%)

● Isolation : Insulation between input - 1st output - 2nd output - power supply - ground

● Insulation Resistance : 100MΩ min. (@ 500V DC) between input, output 1, output 2, power, and ground.

● Dielectric Strength : Between Input-[Output 1, Output 2]-[Power, Ground]: 2000V AC
Power / Ground: 2000V AC

● Applicable standards : Safety IEC61010-1 and EN61010-1
EMC EN61326-1
RoHS directive supported

■ POWER SECTION

● Maximum power consumption :

Power	AC100 to 240V	DC24V
1 output type	6.0VA max.	1.7W max.
2 output type	6.5VA max.	2.1W max.

ORDERING INFORMATION

ITEMS	CODE	SPECIFICATIONS
SERIES	CP3739 -	Ratio/Bias Converter
Input	3	0 to 1V DC
	4	0 to 10V DC
	5	0 to 5V DC
	6	1 to 5V DC
	7	4 to 20mA DC
	9	Others (Please consult before ordering.)
OUTPUT 1	1	0 to 10mV DC
	2	0 to 100mV DC
	3	0 to 1V DC
	4	0 to 10V DC
	5	0 to 5V DC
	6	1 to 5V DC
	7	4 to 20mA DC
	9	Others (Please consult before ordering.)
OUTPUT 2	0	None
	1	0 to 10mV DC
	2	0 to 100mV DC
	3	0 to 1V DC
	4	0 to 10V DC
	5	0 to 5V DC
	6	1 to 5V DC
	7	4 to 20mA DC
	9	Others (Please consult before ordering.)
POWER SUPPLY	90 -	100 to 240V AC ±10% 50/60Hz
	08 -	24V DC ±10%
REMARKS	0	Without
	9	With (Please consult before ordering.)

FRONT VIEW

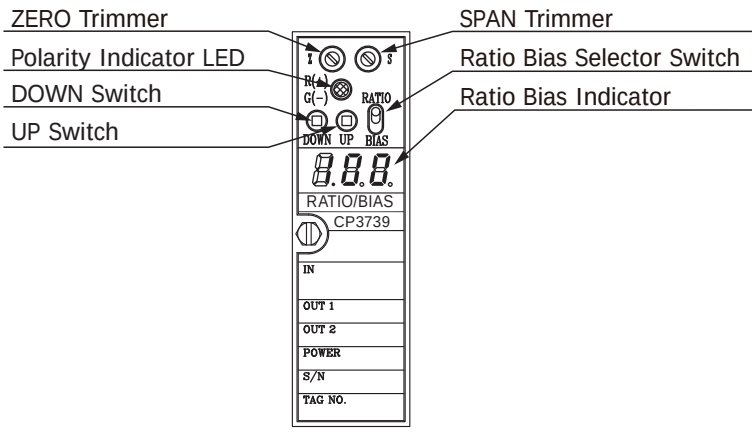

Signal Reverser

OVERVIEW

CE approved

Block Diagram & Terminal Wiring

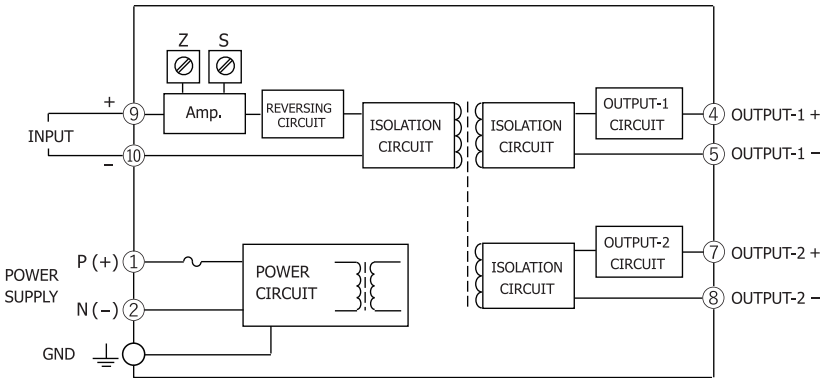

DESCRIPTION

The CP3740 is a slim, plug-in Signal Reverser that converts DC current or voltage input signals into DC signals inversely proportional to those input signals and provides isolated single or dual output.

SPECIFICATIONS

■ INPUT SECTION

- Input resistance : Voltage / input 1 MΩ or more
  Current / input 250Ω
- Input tolerance : Voltage / input 30V DC max. continuous
  Current / input 40mA DC max. continuous

■ OUTPUT SECTION

- Allowable Output Load : Voltage Output (DC) / 1V span min. Load current: 2mA max.
  10mV span min. Load resistance: 10kΩmin.
  100mV span min. Load resistance: 100kΩmin.
  : Current Output (DC) / 4 to 20mA single output Load current: 750Ωmax.
  4 to 20mA dual output Output 1: 550Ω max./Output 2: 350Ω max
- Conversion output variable range : Zero Adjustment Approx. ±5% of span. (Adjustable by the front-accessible trimmer.)
  : Span Adjustment Approx. ±5% of span. (Adjustable by the front-accessible trimmer.)

■ STANDARDS CONFORMITY

- Conversion accuracy : Within ±0.1% at 25±5 °C
- Effect of ambient temperature : Within ±0.2% of span for 10°C change.
- Response Time : 85ms max. (0 to 90%) with a step input at 100%.
- Isolation : Between Input-Output 1-Output 2-Power-Ground
- Insulation Resistance : 100MΩ min. (@ 500V DC) between input, output 1, output 2, power, and ground.
- Dielectric Strength : Input / [Output 1, Output 2] / [Power, Ground]: 2000V AC
  Power / Ground: 2000V AC
  Output 1 / Output 2: 500V AC
- Applicable standards : Safety IEC61010-1 and EN61010-1
  EMC EN61326-1
  RoHS directive supported

■ POWER SECTION

- Maximum power consumption :

Power	AC100 to 240V	DC24V
1 output type	4.0VA max.	1.2W max.
2 output type	5.0VA max.	1.5W max.

ORDERING INFORMATION

ITEMS	CODE	SPECIFICATIONS
SERIES	CP3740 -	Signal Reverser
INPUT	3	0 to 1V DC
	4	0 to 10V DC
	5	0 to 5V DC
	6	1 to 5V DC
	7	4 to 20mA DC
	9	Others (Please consult before ordering.)
OUTPUT 1	1	10 to 0mV DC
	2	100 to 0mV DC
	3	1 to 0V DC
	4	10 to 0V DC
	5	5 to 0V DC
	6	5 to 1V DC
	7	20 to 4mA DC
	9	Others (Please consult before ordering.)
OUTPUT 2	0	None
	1	10 to 0mV DC
	2	100 to 0mV DC
	3	1 to 0V DC
	4	10 to 0V DC
	5	5 to 0V DC
	6	5 to 1V DC
	7	20 to 4mA DC * Note: Available only when output 1 (4 to 20mA DC) is selected.
	9	Others (Please consult before ordering.)
POWER SUPPLY	90 -	100 to 240V AC
	08 -	24V DC
REMARKS	0	Without
	9	With (Please consult before ordering.)

Relay Unit

OVERVIEW

DESCRIPTION

Converts non-voltage contacts, open collectors, and voltage contacts to relay contacts (c contacts).

RoHS directive supported

Block Diagram & Terminal Wiring

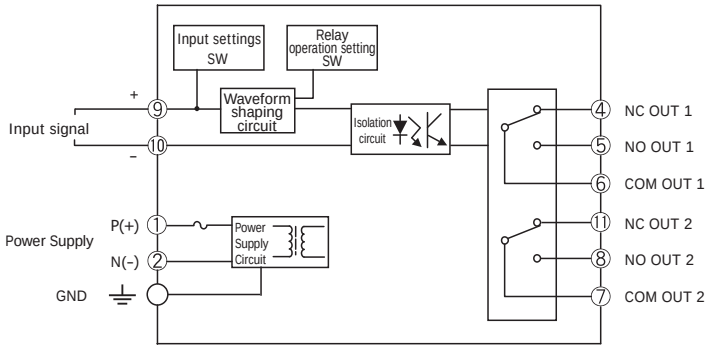

*When connecting an inductive load such as a motor to the output, connect a relay contact protection circuit.

AC power connection example

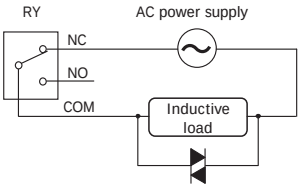

Protection circuits such as varistors and CR circuits

DC power connection example

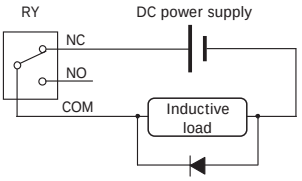

Protection circuits such as diodes, varistors, CR circuits, etc.

* Setting no-voltage contact, open collector (detection power supply: approx. 13V, 3.3kΩ)

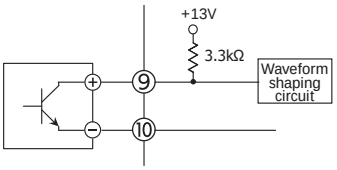

* Setting voltage contact

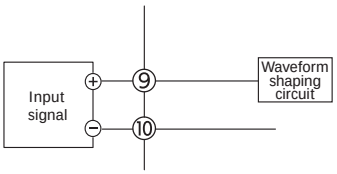

SPECIFICATIONS

■ INPUT SECTION

● Input signal	:	Non-voltage/voltage (switch between non-voltage contact/voltage contact with front switch)
No-voltage contact	:	Detection power supply approx. 13V, 3.3 kΩ
Voltage contact	:	Voltage high level DC5 to 30V, voltage low level DC0 to 1V
● Display LED	:	Green LED (lights up when connected to voltage contact)
● Input resistance	:	When energized: 1MΩ or more (at DC5V input), During power outage: 10kΩ or more
● Allowable input voltage	:	30V DC max. continuous
● Threshold voltage	:	Approx. 2V
● Maximum frequency	:	1Hz
● Input pulse width	:	30ms or more

■ OUTPUT SECTION

- Output signal : c contact output (mechanical relay)
- Monitor lamp : Red LED (lights up when relay excitation)
- Output operation of power failure : NC-COM: ON, NO-COM: OFF
- Relay operation limit : Operation starts approximately 2 seconds after powering.
- Output operation :

		Input settings : No-voltage contact, open collector			Input setting: Voltage contact		
Between input terminals		OFF / ON			Hi / Lo		
Relay operation	NORMAL Setting	Non-excitation/OFF	Excitation/ON	Non-excitation/OFF	Excitation/ON	Non-excitation/OFF	Excitation/ON
	REVERSE Setting	Excitation/ON	Non-excitation/OFF	Excitation/ON	Non-excitation/OFF	Excitation/ON	Non-excitation/OFF

■ STANDARDS CONFORMITY

- Response speed : 30ms or less
- Isolation : Insulation between input - 1st output - 2nd output - power supply - ground
- Insulation Resistance : 100MΩ or more (at 500V DC)
  Input - 1st output - 2nd output - power supply - ground
- Dielectric Strength : Input - [1st output, 2nd output] - [power supply, ground]: 2000V AC
  Between power supply and ground: 2000V AC
  Between 1st output and 2nd output: 500V AC
- Relay Contacts : Maximum allowable voltage: 250V AC, 220V DC
  Maximum allowable current: 2A
  Maximum allowable power: 125VA, 30W
  Minimum applicable load: 10μA 10mV DC
  Electrical life: 0.1A 50V DC (resistive load): 1 million times at 85 °C 5Hz
  10mA 10V DC (resistive load): 1 million times at 85 °C 2Hz
  Mechanical life: 100 million times
- Applicable standards : RoHS directive supported

ORDERING INFORMATION

ITEMS	CODE	SPECIFICATIONS	
SERIES	CP3759 -	Relay Unit	
POWER SUPPLY		90 -	100 to 240V AC ±10% 50/60Hz
		08 -	24V DC ±10%
REMARKS		0	Without
		9	With (Please consult before ordering.)

FRONT VIEW

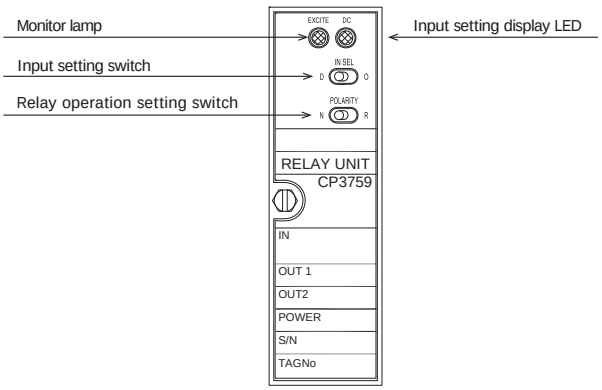

Adder

OVERVIEW

Block Diagram & Terminal Wiring

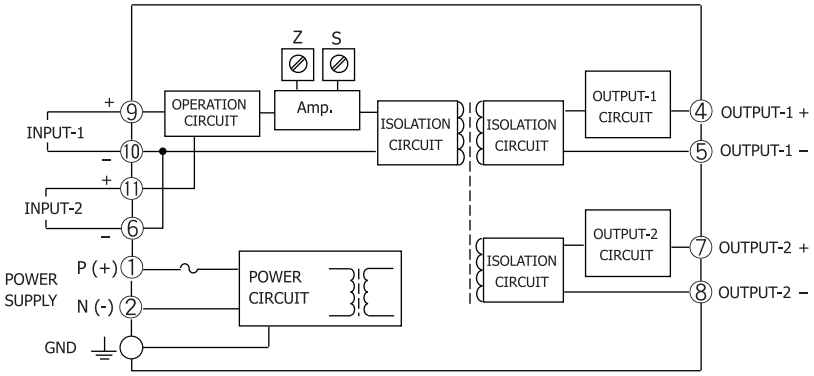

DESCRIPTION

The CP3761 is a slim, plug-in Adder that receives two DC current or voltage signals and outputs a signal proportional to the sum of those signals. The unit provides isolated single or dual output.

SPECIFICATIONS

■ INPUT SECTION

- Input resistance : Voltage / input 1 MΩ or more
  Current / input 250Ω
- Input tolerance : Voltage / input 30V DC max. continuous
  Current / input 40mA DC max. continuous

■ OUTPUT SECTION

- Allowable Output Load : Voltage Output (DC) / 1V span min. Load current: 2mA max.
  10mV span min. Load resistance: 10kΩmin.
  100mV span min. Load resistance: 100kΩmin.
  : Current Output (DC) / 4 to 20mA single output Load current: 750Ωmax.
  4 to 20mA dual output Output 1: 550Ω max./Output 2: 350Ω max
- Conversion output variable range : Zero Adjustment Approx. ±5% of span. (Adjustable by the front-accessible trimmer.)
  : Span Adjustment Approx. ±5% of span. (Adjustable by the front-accessible trimmer.)
- Output Range : 0 to approx. 120%
- Equation : OUT (%) = IN1(%)×K1 + IN2(%)×K2
  IN1 • IN2:0 to 120%

■ STANDARDS CONFORMITY

- Conversion accuracy : Within ±0.1% at 25±5 °C
- Coefficient setting range : (Specify when ordering) K1=0.1 to 2.0 K2=0.1 to 2.0
- Effect of ambient temperature : Within ±0.2% of span for 10°C change.
- Response Time : 85ms max. (0 to 90%) with a step input at 100%.
- Isolation : Between Input-Output 1-Output 2-Power-Ground.
- Insulation Resistance : 100MΩ min. (@ 500V DC) between input, output 1, output 2, power, and ground.
- Dielectric Strength : Input / [Output 1, Output 2] / [Power, Ground]: 2000V AC .
  Power / Ground: 2000V AC
  Output 1 / Output 2: 500V AC
- Applicable standards : RoHS directive supported

■ POWER SECTION

- Maximum power consumption :

Power	AC100 to 240V	DC24V
1 output type	4.5VA max.	1.4W max.
2 output type	5.5VA max.	1.7W max.

ORDERING INFORMATION

ITEMS	CODE	SPECIFICATIONS
SERIES	CP3761 -	Adder
INPUT	3	0 to 1V DC
	4	0 to 10V DC
	5	0 to 5V DC
	6	1 to 5V DC
	7	4 to 20mA DC
	9	Others (Please consult before ordering.)
INPUT COEFFICIENT (K1)	01 to 20	Selectable from 0.1 to 2.0 times
INPUT COEFFICIENT (K2)	01 to 20	Selectable from 0.1 to 2.0 times
OUTPUT 1	1	0 to 10mV DC
	2	0 to 100mV DC
	3	0 to 1V DC
	4	0 to 10V DC
	5	0 to 5V DC
	6	1 to 5V DC
	7	4 to 20mA DC
	9	Others (Please consult before ordering.)
OUTPUT 2	0	None
	1	0 to 10mV DC
	2	0 to 100mV DC
	3	0 to 1V DC
	4	0 to 10V DC
	5	0 to 5V DC
	6	1 to 5V DC
	7	4 to 20mA DC * Note: Available only when output 1 (4 to 20mA DC) is selected.
	9	Others (Please consult before ordering.)
POWER SUPPLY	90 -	100 to 240V AC ±10% 50/60Hz
	08 -	24V DC ±10%
REMARKS	0	Without
	9	With (Please consult before ordering.)

Please specify the input coefficient within the range of 0.1 to 2.0 times.

Note: $0.4 \leq K1+K2$

Subtracter

OVERVIEW

Block Diagram & Terminal Wiring

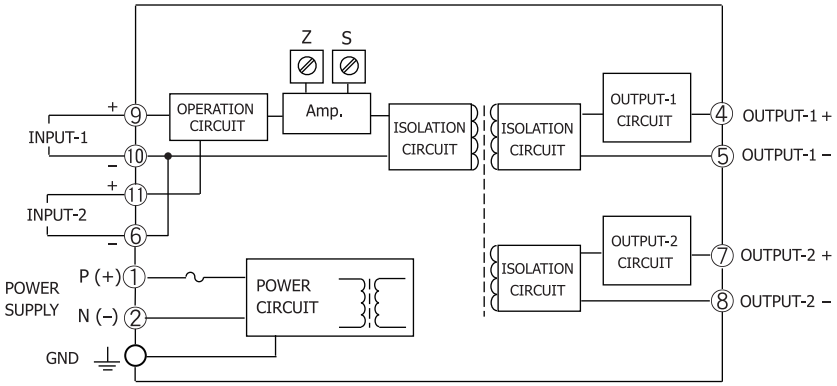

DESCRIPTION

The CP3762 is a slim, plug-in Subtractor that receives two DC current or voltage signals and outputs a signal proportional to the difference between those signals. The unit provides isolated single or dual output.

SPECIFICATIONS

■ INPUT SECTION

- Input resistance : Voltage / input 1 MΩ or more
  Current / input 250Ω
- Input tolerance : Voltage / input 30V DC max. continuous
  Current / input 40mA DC max. continuous

■ OUTPUT SECTION

- Allowable Output Load : Voltage Output (DC) / 1V span min. Load current: 2mA max.
  10mV span min. Load resistance: 10kΩmin.
  100mV span min. Load resistance: 100kΩmin.
  : Current Output (DC) / 4 to 20mA single output Load current: 750Ωmax.
  4 to 20mA dual output Output 1: 550Ω max./Output 2: 350Ω max
- Conversion output variable range : Zero Adjustment Approx. ±5% of span. (Adjustable by the front-accessible trimmer.)
  : Span Adjustment Approx. ±5% of span. (Adjustable by the front-accessible trimmer.)
- Output Range : 0 to approx. 120%
- Equation : Output (%) = IN1 (%) × K1 - IN2 (%) × K2
  where
  IN1: Input 1 (%), K1: Input-1 factor
  IN2: Input 2 (%), K2: Input-2 factor
  * IN1 & IN2: 0 to 120%

■ STANDARDS CONFORMITY

- Conversion accuracy : Within ±0.1% at 25±5 °C
- Effect of ambient temperature : Within ±0.2% of span for 10°C change.
- Response Time : 85ms max. (0 to 90%) with a step input at 100%.
- Isolation : Between Input-Output 1-Output 2-Power-Ground.
- Insulation Resistance : 100MΩ min. (@ 500V DC) between input, output 1, output 2, power, and ground.
- Dielectric Strength : Input / [Output 1, Output 2] / [Power, Ground]: 2000V AC.
  Power / Ground: 2000V AC
  Output 1 / Output 2: 500V AC
- Applicable standards : RoHS directive supported

■ POWER SECTION

- Maximum power consumption :

Power	AC100 to 240V	DC24V
1 output type	4.5VA max.	1.4W max.
2 output type	5.5VA max.	1.7W max.

ORDERING INFORMATION

ITEMS	CODE	SPECIFICATIONS
SERIES	CP3762 -	Subtracter
INPUT	3	0 to 1V DC
	4	0 to 10V DC
	5	0 to 5V DC
	6	1 to 5V DC
	7	4 to 20mA DC
	9	Others (Please consult before ordering.)
INPUT COEFFICIENT (K1)	04 to 20	Selectable from 0.4 to 2.0 times
INPUT COEFFICIENT (K2)	01 to 20	Selectable from 0.1 to 2.0 times
OUTPUT 1	1	0 to 10mV DC
	2	0 to 100mV DC
	3	0 to 1V DC
	4	0 to 10V DC
	5	0 to 5V DC
	6	1 to 5V DC
	7	4 to 20mA DC
	9	Others (Please consult before ordering.)
OUTPUT 2	0	None
	1	0 to 10mV DC
	2	0 to 100mV DC
	3	0 to 1V DC
	4	0 to 10V DC
	5	0 to 5V DC
	6	1 to 5V DC
	7	4 to 20mA DC * Note: Available only when output 1 (4 to 20mA DC) is selected.
	9	Others (Please consult before ordering.)
POWER SUPPLY	90 -	100 to 240V AC ±10% 50/60Hz
	08 -	24V DC ±10%
REMARKS	0	Without
	9	With (Please consult before ordering.)

Please specify the input coefficient.
Note: K1 is 0.4 to 2.0, K2 is 0.1 to 2.0

Signal Isolator

OVERVIEW

Block Diagram & Terminal Wiring

Current Input / Current Output Model:

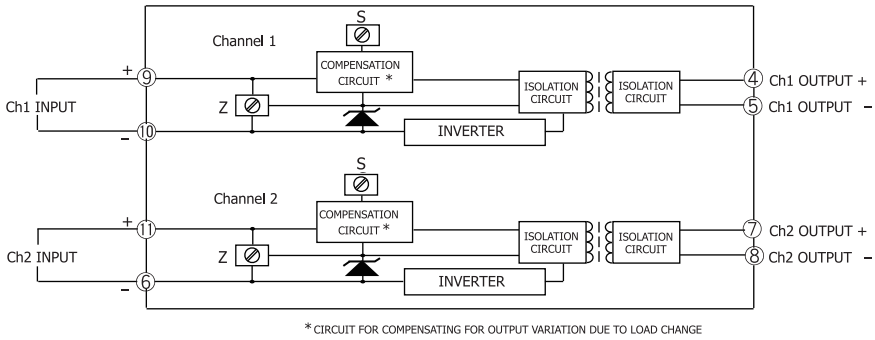

Current Input / Voltage Output Model:

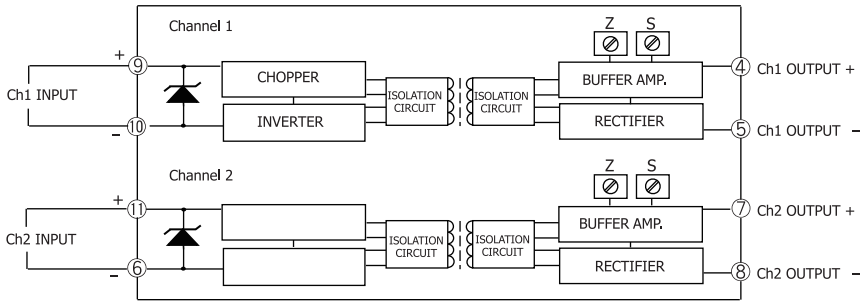

DESCRIPTION

The CP3764 is a slim, plug-in Signal Isolator that takes the power from its input current loop.

SPECIFICATIONS

■ INPUT SECTION

- Input Signal : 4 to 20mA DC
- Input Resistance
  - Voltage Output Model : Approx. 250Ω (for 20mA DC input)
  - Current Output Model : Approx. 230Ω + Load resistance (for 20mA DC input)
- Allowable Input Current : 30mA DC max.

■ OUTPUT SECTION

- Allowable Output Load
  - Voltage Output (DC) : 50kΩ min.
  - Current Output (DC) : 4 to 20mA 350Ω max.
    (Allowable load resistance: 50 to 350Ω)
- Zero Adjustment
  - Voltage Output Model : Approx. ±2.5% of span.
  - Current Output Model : Approx. ±0.5% of span.
    (Adjustable by the front-accessible trimmer.)
- Span Adjustment
  - Voltage Output Model : Approx. ±2.5% of span.
  - Current Output Model : Approx. ±1.5% of span.
    (Adjustable by the front-accessible trimmer.)

Voltage Output

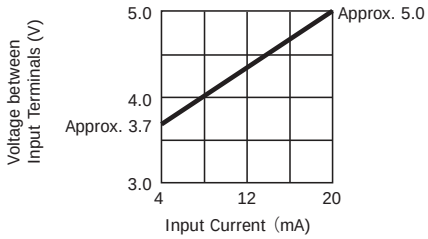

Current Output

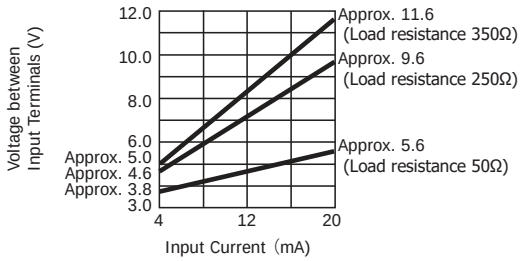

■ **STANDARDS CONFORMITY**

- Conversion accuracy : Within ±0.15%
- Effect of ambient temperature : Within ±0.2% of span for 10°C change.
- Response Time : 15ms. max.(0 to 90%) at 100% step input
- Output Variation due to Load Change : 0.01%/Ω (50 to 150Ω)
  0.005%/Ω (150 to 350Ω)
  * Adjusted at 250Ω for shipment.
- Isolation : Isolation between input and output, and channels.
- Insulation Resistance : 100MΩ min. (@ 500V DC) between input and output, and channels.
- Dielectric Strength : Input / Output: 1500V AC
  Channel to Channel: 1500V AC
- Applicable standards : RoHS directive supported

ORDERING INFORMATION

ITEMS	CODE	SPECIFICATIONS	
SERIES	CP3764 -	Signal Isolator	
OUTPUT 2		6	1 to 5V DC
		7	4 to 20mA DC
REMARKS		0	Without
		9	With (Please consult before ordering.)

Multiplier (Arithmetic Operation Unit)

OVERVIEW

Block Diagram & Terminal Wiring

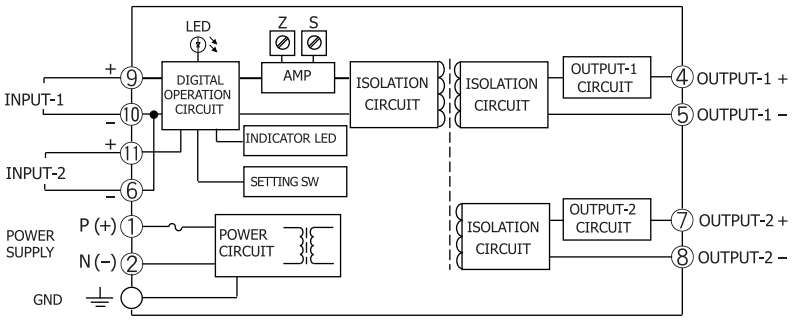

DESCRIPTION

The CP3765 is a slim, plug-in Multiplier that receives two DC current or voltage signals and outputs a signal proportional to the result (sum, difference, product, or quotient) of an arithmetic operation (addition, subtraction, multiplication, or division). The unit provides isolated single or dual output.

SPECIFICATIONS

■ INPUT SECTION

● Input Resistance
- Voltage Input (DC) : With or without power: 1MΩ min.
- Current Input (DC) : 250Ω

● Allowable Input Voltage
- Voltage Input Model : 30V DC max., continuous
- Current Input Model : 40mA DC max., continuous

● Input Range : 0 to 120%

■ OUTPUT SECTION

● Allowable Output Load

:	Voltage Output (DC) /	1V span min.	Load current: 2mA max.
		10mV span min.	Load resistance: 10kΩmin.
		100mV span min.	Load resistance: 100kΩmin.
:	Current Output (DC) /	4 to 20mA single output	Load current: 750Ωmax.
		4 to 20mA dual output	Output 1: 550Ω max./Output 2: 350Ω max

● Conversion output variable range
- : Zero Adjustment Approx. ±5% of span. (Adjustable by the front-accessible trimmer.)
- : Span Adjustment Approx. ±5% of span. (Adjustable by the front-accessible trimmer.)

● Output Range : 0 to approx. 120%

■ STANDARDS CONFORMITY

● Equations

:	Addition	Y = (IN1 × K1) + (IN2 × K2)
	Subtraction	Y = (IN1 × K1) – (IN2 × K2)
	Multiplication	Y = (IN1 × K1) × (IN2 × K2)
	Division	Y = (IN1 × K1) / (IN2 × K2)

Remarks
Y: Output (%)
K1: Input-1 factor, K2: Input-2 factor
IN1: Input 1 (%), IN2: Input 2 (%)

● Factor Setting Range : The factors K1 and K2 should be set in steps of 0.01 within the following respective ranges.

Addition	K1 = 0.10 to 2.00	K2 = 0.10 to 2.00 (K1 + K2 ≥ 0.40)
Subtraction	K1 = 0.40 to 2.00	K2 = 0.10 to 2.00
Multiplication	K1 = 0.20 to 2.00	K2 = 0.20 to 2.00 (0.4 ≤ K1 × K2 ≤ 2.00)
Division	K1 = 0.10 to 2.00	K2 = 0.10 to 2.00 (0.4 ≤ K1/K2 ≤ 2.00)

● Accuracy Rating : (at 25°C±5°C)

Addition	If K1 ≤ 1.00 and K2 ≤ 1.00:	Within ±0.2% of span.
	If K1 > 1.00 or K2 > 1.00:	Within ±0.4% of span.
Subtraction	If K1 ≤ 1.00 and K2 ≤ 1.00:	Within ±0.2% of span.
	If K1 > 1.00 or K2 > 1.00:	Within ±0.4% of span.
Multiplication	If K1 × K2 ≤ 1.00:	Within ±0.2% of span.
	If K1 × K2 > 1.00:	Within ±0.4% of span.
Division	If K1/K2 ≤ 1.00 (IN2 ≥ 20%):	Within ±1.0% of span.
	If K1/K2 > 1.00 (IN2 ≥ 20%):	Within ±2.0% of span.

- Effect of ambient temperature : Within ±0.15% of span for 10°C change.
- Response Time : 150ms max. (0 to 90%) with a step input at 100%.
- Isolation : Between Input-Output 1-Output 2-Power-Ground
- Insulation Resistance : 1100MΩ min. (@ 500V DC) between input, output 1, output 2, power, and ground.
- Dielectric Strength : Input / [Output 1, Output 2] / [Power, Ground]: 2000V AC
  Power / Ground: 2000V AC
  Output 1 / Output 2: 500V AC
- Applicable standards : RoHS directive supported

■ **POWER SECTION**

- Maximum power consumption :

Power	AC100 to 240V	DC24V
1 output type	6.0VA max.	1.7W max.
2 output type	6.5VA max.	2.1W max.

FRONT VIEW

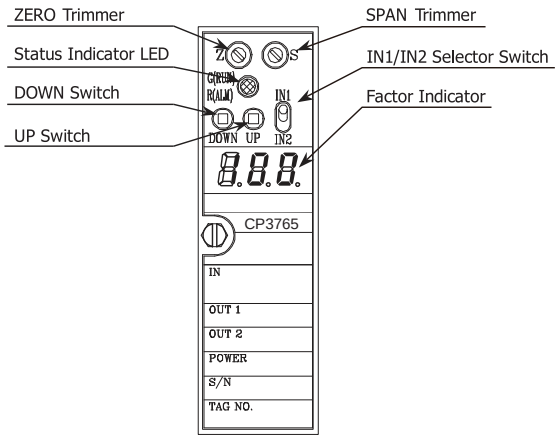

ORDERING INFORMATION

ITEMS	CODE	SPECIFICATIONS
SERIES	CP3765 -	Multiplier (Arithmetic Operation Unit)
INPUT 1	3	0 to 1V DC
	4	0 to 10V DC
	5	0 to 5V DC
	6	1 to 5V DC
	7	4 to 20mA DC
	9	Others (Please consult before ordering.)
INPUT 2	3	0 to 1V DC
	4	0 to 10V DC
	5	0 to 5V DC
	6	1 to 5V DC
	7	4 to 20mA DC
	9	Others (Please consult before ordering.)
OUTPUT 1	1	0 to 10mV DC
	2	0 to 100mV DC
	3	0 to 1V DC
	4	0 to 10V DC
	5	0 to 5V DC
	6	1 to 5V DC
	7	4 to 20mA DC
	9	Others (Please consult before ordering.)
OUTPUT 2	0	None
	1	0 to 10mV DC
	2	0 to 100mV DC
	3	0 to 1V DC
	4	0 to 10V DC
	5	0 to 5V DC
	6	1 to 5V DC
	7	4 to 20mA DC * Note: Available only when output 1 (4 to 20mA DC) is selected.
	9	Others (Please consult before ordering.)
POWER SUPPLY	90 -	100 to 240V AC ±10% 50/60Hz
	08 -	24V DC ±10%
REMARKS	0	Without
	9	With (Please consult before ordering.)

Analog hold Converter

OVERVIEW

Block Diagram & Terminal Wiring

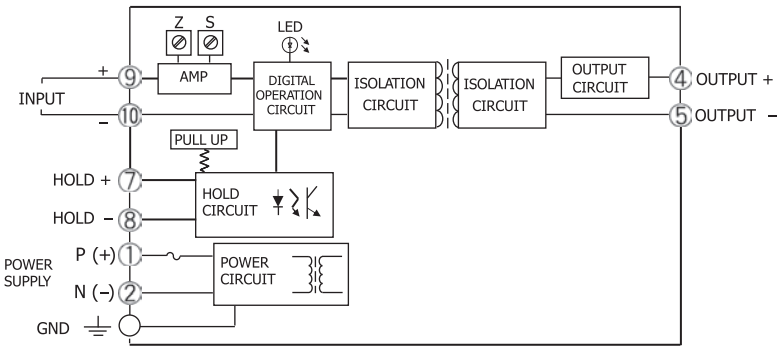

DESCRIPTION

The CP3766 is a slim, plug-in Analog hold Converter that holds an output signal using external hold input and provides an isolated single output.
RoHS directive supported

SPECIFICATIONS

■ INPUT SECTION

● Input Resistance

Voltage Input (DC)	:	With or without power: 1MΩ min.
Current Input (DC)	:	250Ω

● Allowable Input Voltage

Voltage Input Model	:	30V DC max., continuous
Current Input Model	:	40mA DC max., continuous

● Hold Input : Contact input type (internal supply 24VDC, 10mA) Hold on short-circuit

■ OUTPUT SECTION

● Allowable Output Load	:	Voltage Output (DC) /	1V span min.	Load current: 2mA max.
			10mV span min.	Load resistance: 10kΩmin.
			100mV span min.	Load resistance: 100kΩmin.
	:	Current Output (DC) /	4 to 20mA single output	Load current: 750Ωmax.
			4 to 20mA dual output	Output 1: 550Ω max./Output 2: 350Ω max
● Conversion output variable range	:	Zero Adjustment	Approx. ±5% of span. (Adjustable by the front-accessible trimmer.)	
	:	Span Adjustment	Approx. ±5% of span. (Adjustable by the front-accessible trimmer.)	

■ STANDARDS CONFORMITY

● Conversion accuracy	:	Within ±0.2% at 25±5 °C
● Effect of ambient temperature	:	Within ±0.15% of span for 10°C change.
● Response Time	:	400ms max. (0 to 90%) with a step input at 100%.
● Isolation	:	Isolation between input, hold input, output, and power.
● Insulation Resistance	:	100MΩ min. (@ 500V DC) between input, hold input, output, power, and ground.
● Dielectric Strength	:	Input / [Output, Hold input] / [Power, Ground]: 2000V AC
		Power / Ground: 2000V AC
		Output / Hold input: 500V AC
● Applicable standards	:	RoHS directive supported

■ LED STATUS INDICATORS

● Indicator Patterns

No.	Event	Hold Status Indicator LED		output signal	Recovery Operation
		Red LED	Green LED		
1	Power ON	Green LED turns ON for 1 second, and then red LED turns ON for 0.5 second. This cycle is repeated 3 times.		Normal	—
2	Normal operation	OFF	ON	Normal	—
3	Hold operation	OFF	Blinks at 1 second intervals	Held value	—
4	Held value recording error	Blinks at 1 second intervals	OFF	Held value: 0% or less	Cancel the hold mode.
5	DAC error	Blinks at 0.25 second intervals.	OFF	Typically 0% or less, but may vary.	None
6	System error	ON	Not defined	Typically 0% or less, but may vary.	None

* There are times an output signal is undefined in item 5–6.
* There are times the red LED does not flash in item 6.

■ POWER SECTION

● Maximum power consumption : AC100 to 240V / 6.5VA max.
DC24V / 1.8W max.

FRONT VIEW

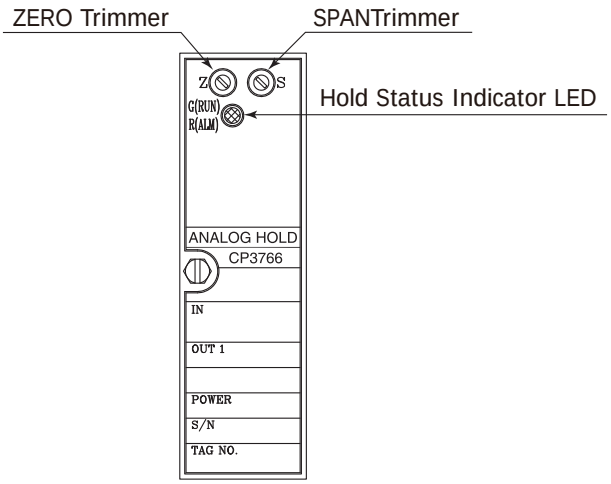

ORDERING INFORMATION

ITEMS	CODE	SPECIFICATIONS	
SERIES	CP3766 -	Analog hold Converter	
INPUT		3	0 to 1V DC
		4	0 to 10V DC
		5	0 to 5V DC
		6	1 to 5V DC
		7	4 to 20mA DC
		9	Others (Please consult before ordering.)
OUTPUT		1	0 to 10mV DC
		2	0 to 100mV DC
		3	0 to 1V DC
		4	0 to 10V DC
		5	0 to 5V DC
		6	1 to 5V DC
		7	4 to 20mA DC
		9	Others (Please consult before ordering.)
POWER SUPPLY		90 -	100 to 240V AC ±10% 50/60Hz
		08 -	24V DC ±10%
REMARKS		0	Without
		9	With (Please consult before ordering.)

Doubler-Inverter (X-Characteristic Converter)

Block Diagram & Terminal Wiring

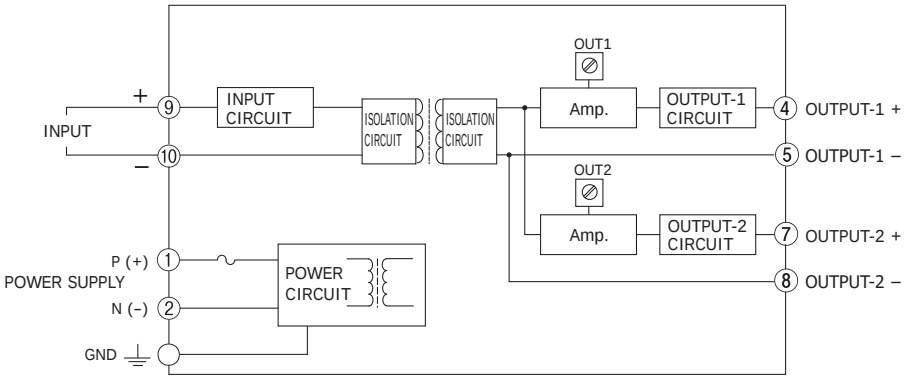

OVERVIEW

Converts regulation input signals into heating and cooling signals or humidification and dehumidification signals.
RoHS directive supported

SPECIFICATIONS

■ INPUT SECTION

● Input Resistance
Voltage Input (DC) : 1MΩ min.
Current Input (DC) : 4 to 20mA 250Ω

● Allowable Input Voltage
Voltage Input Model : 30V DC max., continuous
Current Input Model : 40mA DC max., continuous

■ OUTPUT SECTION

● Maximum Output Load
Voltage Output (DC) : 2mA max.
Current Output (DC) : 600Ω max.

● Adjustment range of characteristics : Output 1: Out 0% can be adjustable within the range of input 0-65%.
Output 2: Out 0% can be adjustable within the range of input 35-100%.
(Adjustable by the front-accessible trimmer.)

■ STANDARDS CONFORMITY

● Accuracy Rating : Within ±0.3% of span (at 25°C±5°C; gain = 1 or -1).

● Effect of ambient temperature : Within ±0.2% of span for 10°C change.

● Response Time : 500ms. max. (0 to 90%) with a step input at 100%.

● Isolation : Isolation between input, [output 1, output 2], and power.

● Insulation Resistance : 100MΩ min. (@ 500V DC) between input, [output 1, output 2], power, and ground.

● Dielectric Strength : Input / [Output 1, Output 2] / [Power, Ground]: 2000V AC
Power / Ground: 2000V AC

● Applicable standards : RoHS directive supported

■ POWER SECTION

● Power Requirements : 100 to 240V AC 6.5VA max
24V DC 2.0W max

ORDERING INFORMATION

ITEMS	CODE	SPECIFICATIONS
SERIES	CP3770 -	Doubler-Inverter (X-Characteristic Converter)
INPUT	4	0 to 10V DC
	6	1 to 5V DC
	7	4 to 20mA DC
	9	Others (Please consult before ordering.)
Conversion output 1, 2 (OUT 1, 2)	4	0 to 10V DC
	6	1 to 5V DC
	7	4 to 20mA DC
	9	Others (Please consult before ordering.)
POWER SUPPLY	90 -	100 to 240V AC ±10% 50/60Hz
	08 -	24V DC ±10%
REMARKS	0	Without
	9	With (Please consult before ordering.)

INPUT / OUTPUT CHARACTERISTICS DRAWING

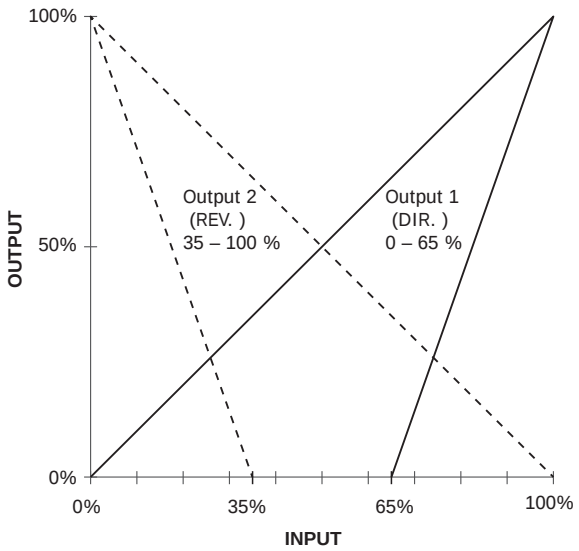

EXTERNAL DIMENSIONS

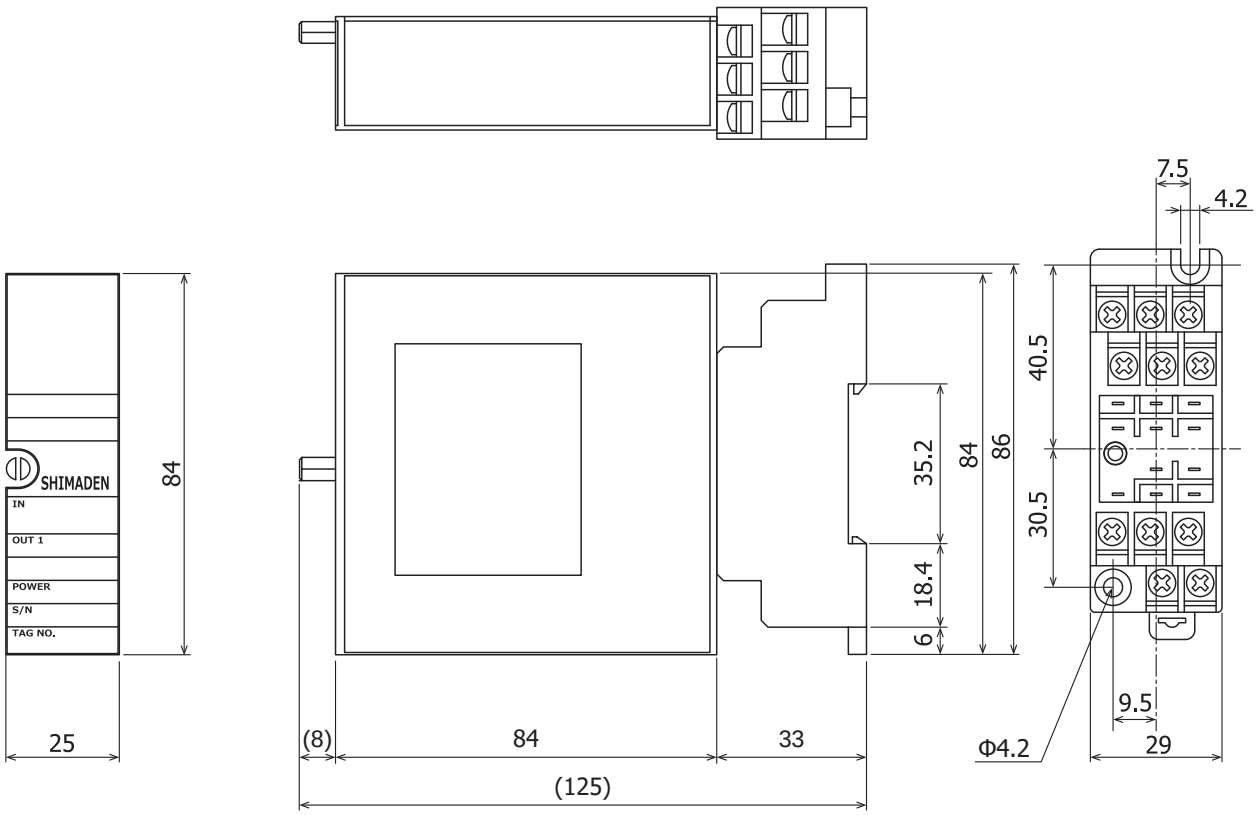

Unit : mm

■ **The contents of this material are subject to change without notice.**

WARNING	* Be sure to follow the instruction manual when operating this device. * This device is designed for industrial use to control temperature, humidity and other physical values. Avoid using it for control of devices upon which human life is dependent. * If the possibility of loss or damage to your system or property as a result of failure of any parts of the process exists, proper safety measures must be made before the instrument is put into use so as to prevent the occurrence of trouble.

Head Office & Saitama Factory
ISO 9001/ISO14001 Certification Obtained

Temperature and Humidity Control Specialists
SHIMADEN CO., LTD.
Head Office: 2-30-10 Kitamachi, Nerima-ku, Tokyo 179-0081 Japan
Phone: +81-3-3931-7891 Fax: +81-3-3931-3089
E-MAIL: exp-dept@shimaden.co.jp URL: https://www.shimaden.co.jp